SIMTEK

Tools for
highest
expectations

3 Cutting Edges
Precision. Efficiency. Cost effectiveness.

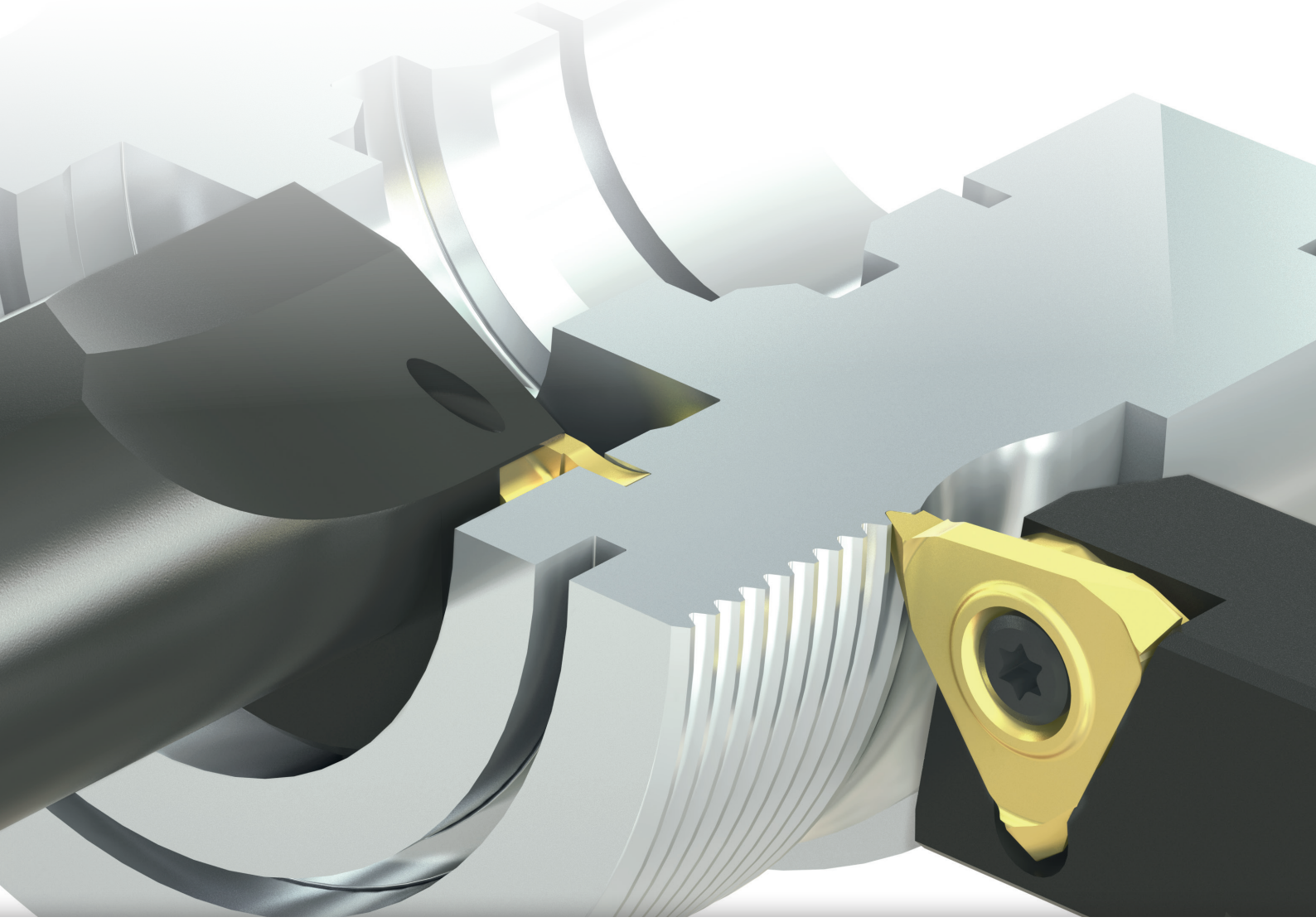

simturn E3
SIMTEK Turning Tools Type E3

Part Catalog
R20 US-Edition

SIMTEK

Tools for
highest
expectations

Contact

SIMTEK USA Inc.
13 Fairfield Ave. Suite 104
US 07424-1257 Little Falls, NJ

fon +1 862 757 8130
fax +1 862 757 8134
mail usa@simtek.com/usa
web www.simtek.com

© 2020 SIMTEK Group. All rights reserved. Errors, omissions and changes excepted. Reprint of this catalog, complete or in extracts, only with our prior written permission. precium is a product of the SIMTEK Group and exclusively distributed through the global SIMTEK Distribution Network. SIMTEK, simturn, simmill, and simcut are registered trademarks in the US and several other countries. „QR Code" is a registered trademark of DENSO WAVE INCORPORATED. This document has been prepared in English. In the event a translation exists and there is a discrepancy, this English original shall prevail.

The Tool System Overview

3 Cutting Edges... **Precision. Efficiency. Cost Effectiveness.**

Choice of Applications

Grooving · Profiling · Threading · Parting off · Face Grooving

Overview of all applications as of page 6

Main Applications

Grooving

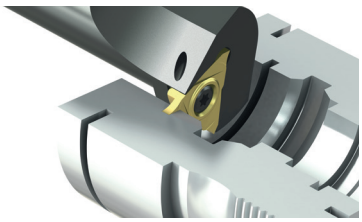

Indexable inserts for the machining of circlip ring grooves according to DIN 471/472 and 983/984. Nominal width of grooves from 0,5 mm (0.020“) up to 5,15 mm (0.203“). Also available with special chip form channel or with chamfer.

Profiling

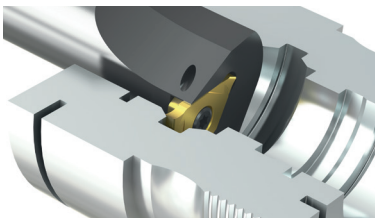

Grooving and profiling for internal and external applications. Available with various cutting edge widths, corner radiuses as well as with full radius and two ground chip form channels.

Threading

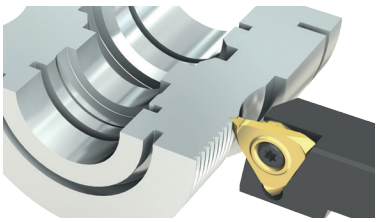

Wide range of tools for machining the most common types of threads. For internal and external applications.

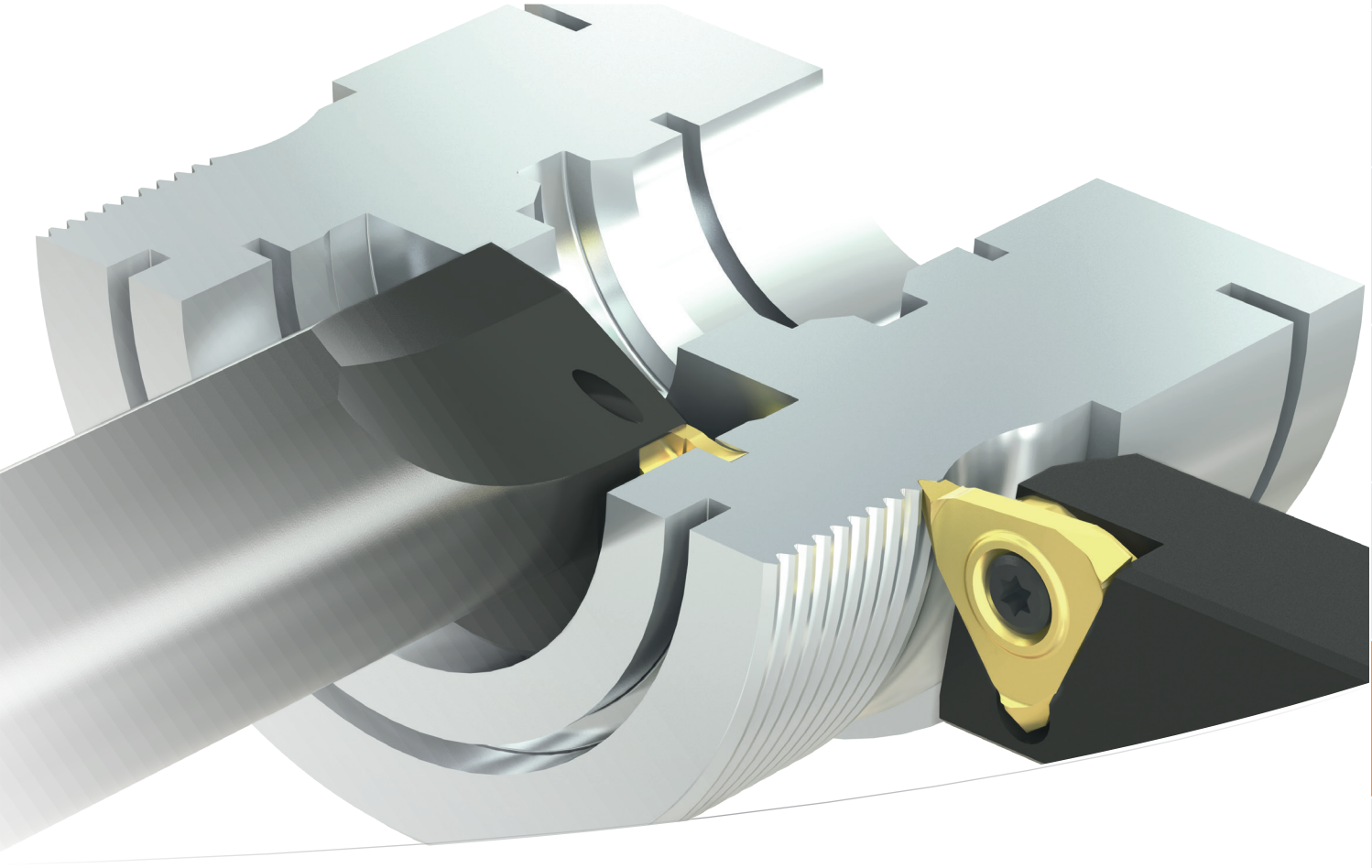

Parting off

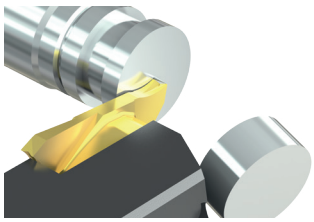

Parting off up to Ø10 mm (0.394“). Available in different widths, angles and with/without ground chip form channel.

High stability thanks to lateral screw clamping

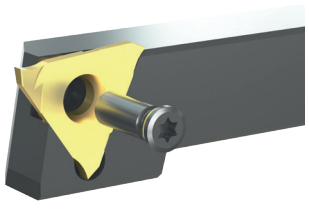

The system simturn E3 provides highest stability thanks to lateral screw clamping. This helps to absorb the longitudinal forces and provides highest efficiency.

The System Details

Please read the General Instructions for use on Page 49

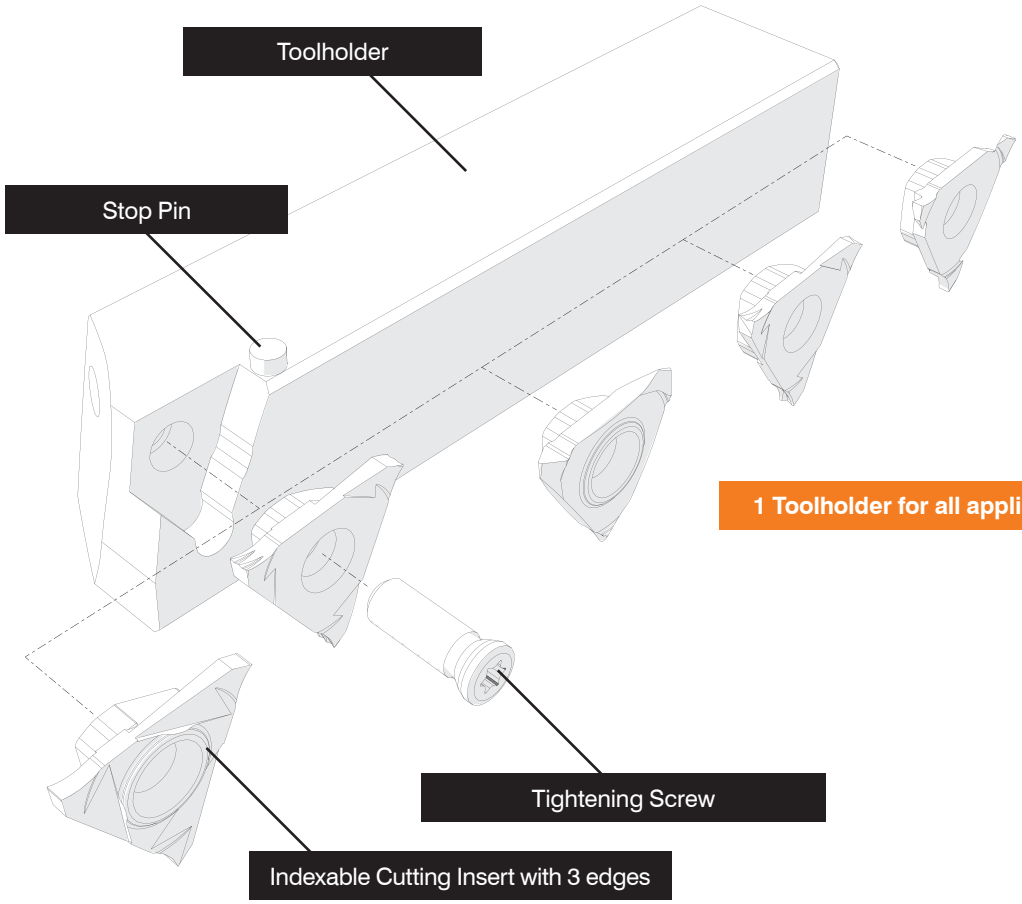

1 Toolholder for all applications

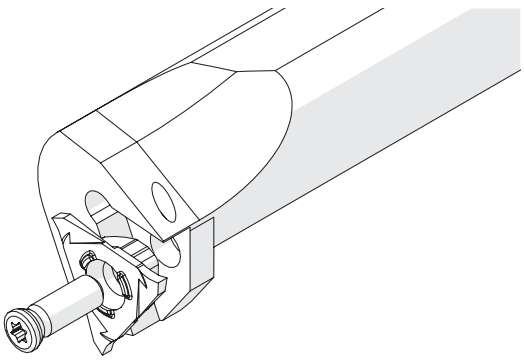

Available for internal and external Applications

External
Maximum Cutting Depth 5,0 mm (0.197“)

Internal
As of bore diameter 41,0 mm (1.614“)

Standard Applications

As of page 15

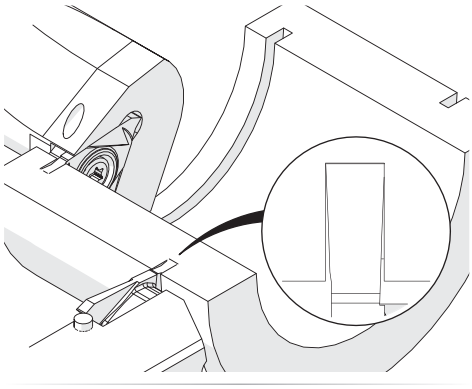

Grooving, Circlip Ring Grooves

Page 17

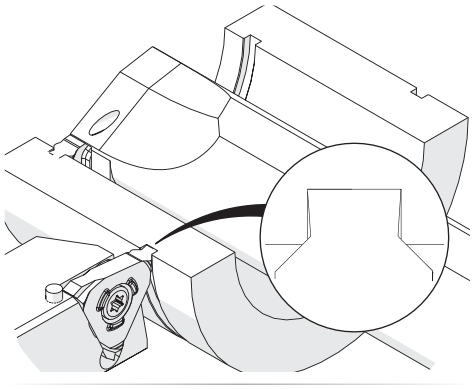

Grooving, Circlip Ring Grooves with Chamfer

As of page 18

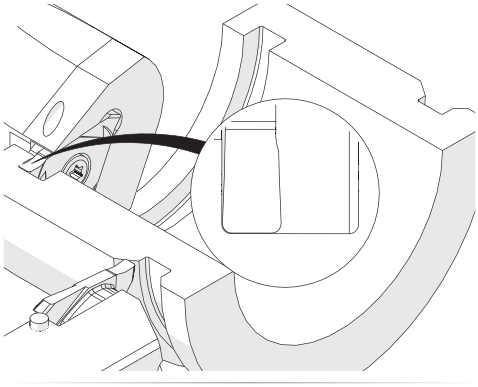

Grooving and Profiling

Page 21

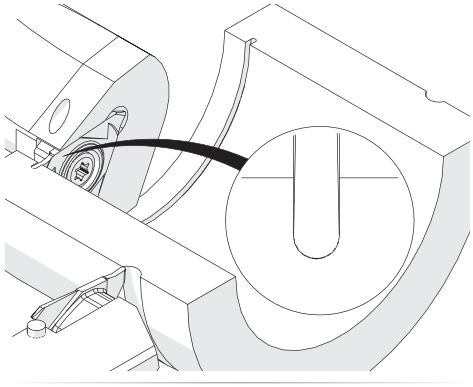

Grooving and Profiling, Full Radius

Page 22

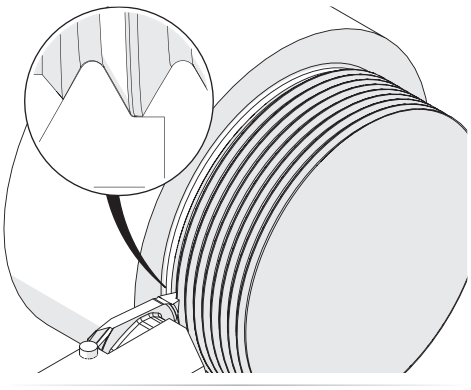

Threading: Metric ISO, External, Full Profile

Page 23

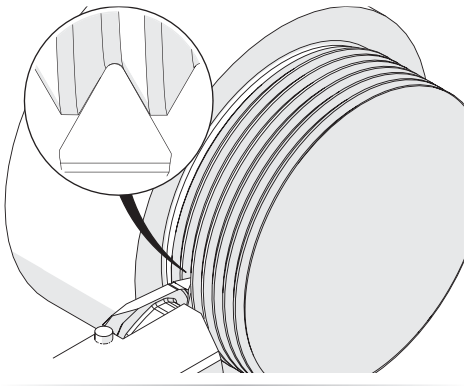

Threading: Metric ISO, External, Partial Profile

Standard Applications

Page 24

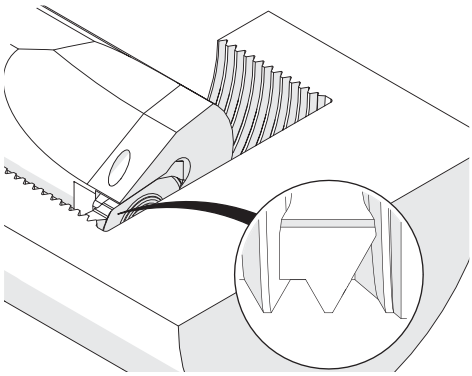

Threading: Metric ISO, Internal, Full Profile

Page 26

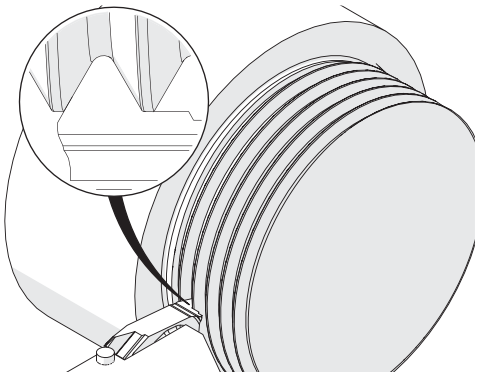

Threading: UN, External, Full Profile

Page 27

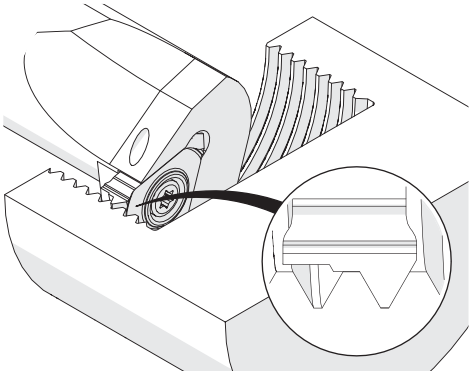

Threading: UN, Internal, Full Profile

Page 28

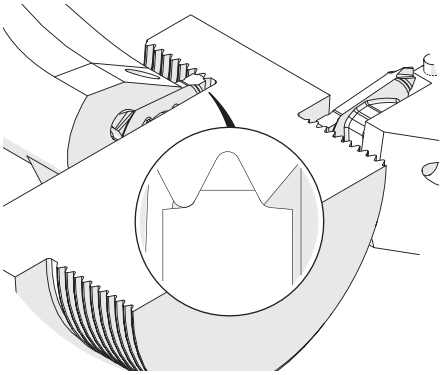

Threading: Whitworth, Full Profile

Page 29

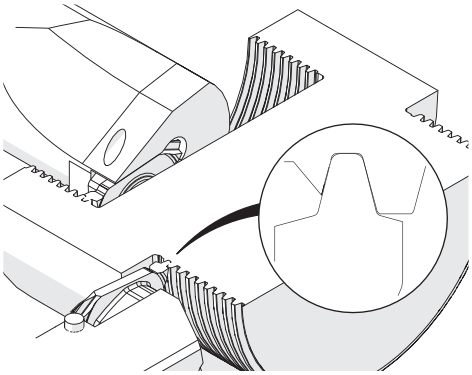

Threading: Trapezoidal Thread, Full Profile

Page 30

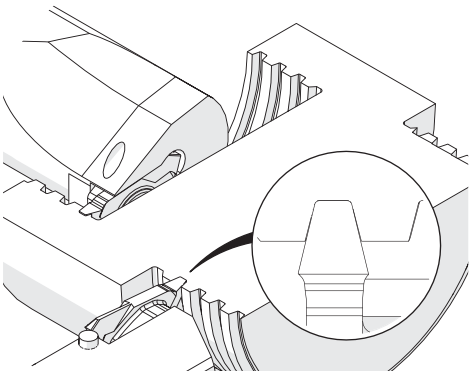

Threading: ACME, Partial Profile

Standard Applications

Page 31

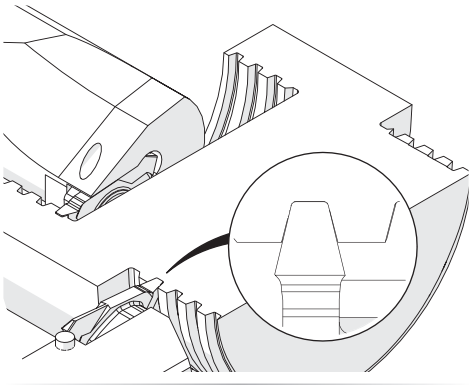

Threading: STUB ACME, Partial Profile

Page 32

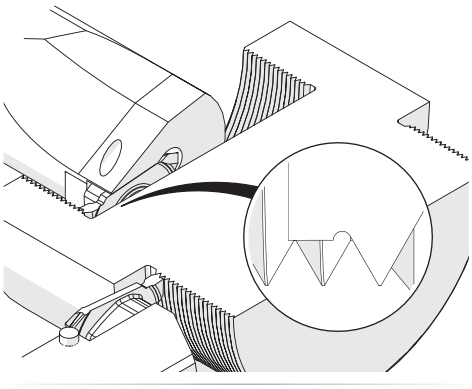

Threading: NPT, Full Profile

As of page 34

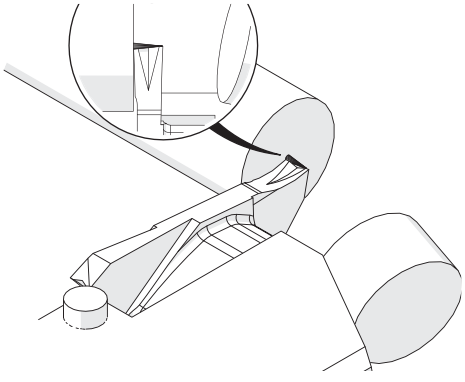

Parting off

As of page 36

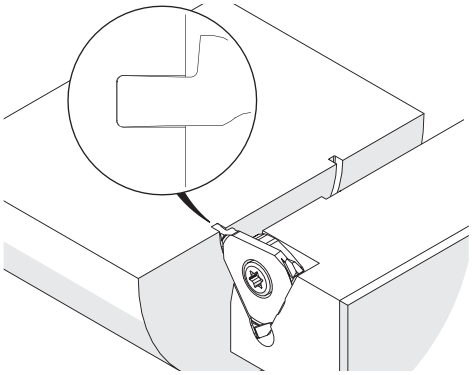

Face Grooving

Page 40

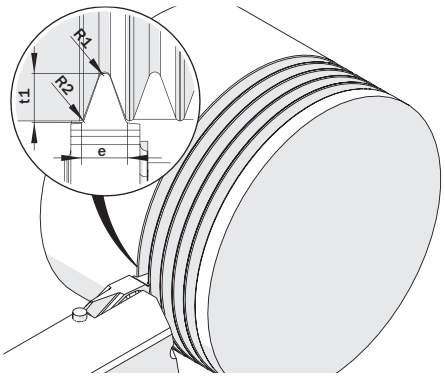

Poly-V-Belt Grooves

Toolholder, for External Application, Typ C

Toolholder for external applications. Cutting depths of up to 5,0 mm (0.197“).

Tightening torque (screw)

“TE3 M5x11,5 T20R”: 6,0 Nm
“TE3 M5x13 T20R”: 7,0 Nm
“TE3 M5x15 T20R”: 6,0 Nm

TW ST R Legend 42

Scan QR-Code Or Visit **www.simtek.info/cp/307**

This page contains inch tools! These tools are indicated by **inch** on the right hand side.

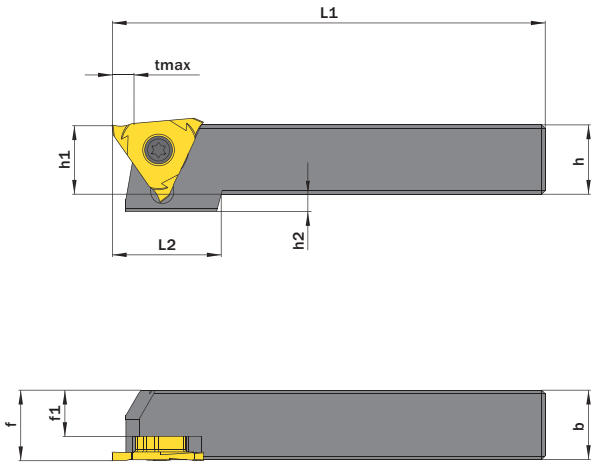

Drawing shows: TE3.1616.00 R

tmax depends on workpiece diameter (Ød)	tmax
up to Ø100,0 mm / up to Ø3.937”	5,0 mm / 0.197”
up to Ø160,0 mm / up to Ø6.299”	4,4 mm / 0.173”
up to Ø250,0 mm / up to Ø9.843”	3,7 mm / 0.146”
up to Ø400,0 mm / up to Ø15.748”	3,2 mm / 0.126”

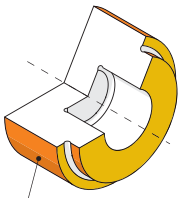

Mainly designed for these surfaces

Also possible depending on insert/fixation type

h mm/inch	b mm/inch	Part number	Webcode www.simtek.com/webcode				f mm/inch	f1 mm/inch	h1 js14 mm/inch	h2 mm/inch	L1 mm/inch	L2 mm/inch	Screw	Screw driver	Connectcode www.simtek.com/ccode				
▼ h = 12,0 mm																			
12,0	12,0	**TE3.1212.00 R/L**	R	ACKZ	L	AMPP	12,3	6,7	12,0	13,0	100,0	24,0	TE3 M5x11,5 T20R	T20R	R	TE3.R.5.3	L	TE3.L.5.3	
12,0	16,0	**TE3.1216.00 R/L**	R	AD6G	L	AMTD	16,3	10,7	12,0	13,0	100,0	24,0	TE3 M5x15 T20R	T20R	R	TE3.R.5.3	L	TE3.L.5.3	
12,0	16,0	**TE3.1216.13 R/L**	R	AD2M	L	AKDQ	16,3	10,7	12,0	13,0	130,0	24,0	TE3 M5x15 T20R	T20R	R	TE3.R.5.3	L	TE3.L.5.3	
▼ h = 0.500“																			
0.500“	0.500“	**TE3.0.500.00 R/L**	R	A2ZS	L	A2ZQ	0.511“	0.291“	0.500“	0.500“	3.397“	0.945“	TE3 M5x11,5 T20R	T20R	R	TE3.R.5.3	L	TE3.L.5.3	inch
▼ h = 0.625“																			
0.625“	0.625“	**TE3.0.625.00 R/L**	R	AEXX	L	AH51	0.635“	0.416“	0.625“	0.359“	3.397“	0.866“	TE3 M5x15 T20R	T20R	R	TE3.R.5.3	L	TE3.L.5.3	inch
▼ h = 16,0 mm																			
16,0	16,0	**TE3.1616.00 R/L**	R	AB6B	L	ADGA	16,3	10,7	16,0	9,0	100,0	22,0	TE3 M5x15 T20R	T20R	R	TE3.R.5.3	L	TE3.L.5.3	
16,0	16,0	**TE3.1616.13 R/L**	R	ACHT	L	AHFY	16,3	10,7	16,0	9,0	130,0	22,0	TE3 M5x15 T20R	T20R	R	TE3.R.5.3	L	TE3.L.5.3	
▼ h = 0.750“																			
0.750“	0.750“	**TE3.0.750.00 R/L**	R	AH35	L	AHBZ	0.761“	0.541“	0.750“	0.234“	3.397“	0.827“	TE3 M5x15 T20R	T20R	R	TE3.R.5.3	L	TE3.L.5.3	inch
▼ h = 20,0 mm																			
20,0	20,0	**TE3.2020.00 R/L**	R	AKQ0	L	AGSG	20,3	14,7	20,0	5,0	100,0	21,0	TE3 M5x15 T20R	T20R	R	TE3.R.5.3	L	TE3.L.5.3	
20,0	20,0	**TE3.2020.13 R/L**	R	AK6N	L	APMH	20,3	14,7	20,0	5,0	130,0	21,0	TE3 M5x15 T20R	T20R	R	TE3.R.5.3	L	TE3.L.5.3	
▼ h = 25,0 mm																			
25,0	25,0	**TE3.2525.00 R/L**	R	AD35	L	ANXN	25,3	19,7	25,0	-	125,0	-	TE3 M5x15 T20R	T20R	R	TE3.R.5.3	L	TE3.L.5.3	
25,0	25,0	**TE3.2525.15 R/L**	R	ADCH	L	AAP7	25,3	19,7	25,0	-	150,0	-	TE3 M5x15 T20R	T20R	R	TE3.R.5.3	L	TE3.L.5.3	
▼ h = 1.000“																			
1.000“	1.000“	**TE3.1.000.00 R/L**	R	AUJS	L	AUJT	1.011“	0.791“	1.000“	-	4.921“	-	TE3 M5x15 T20R	T20R	R	TE3.R.5.3	L	TE3.L.5.3	inch
▼ h = 32,0 mm																			
32,0	25,0	**TE3.3225.17 R/L**	R	ABFD	L	AEDK	25,3	19,7	32,0	-	170,0	-	TE3 M5x13 T20R	T20R	R	TE3.R.5.3	L	TE3.L.5.3	

Order example: **TE3.2020.00 R** (R = Right hand version)

Toolholder, For External Application, Cranked, Typ C

Toolholder for external applications. 90° cranked style.
Cutting depths of up to 5,0 mm (0.197“).

Tightening torque (screw)
6,0 Nm

TW ST R Legend 42

Scan QR-Code Or Visit **www.simtek.info/cp/331**

This page contains inch tools! These tools are indicated by **inch** on the right hand side.

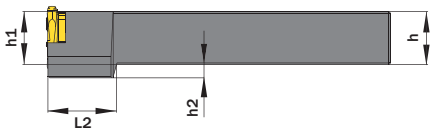

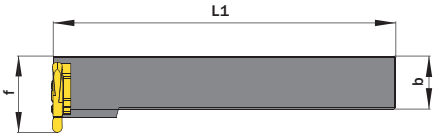

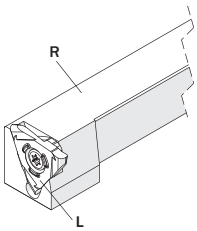

Please use right hand toolholder with left hand insert and vice versa.

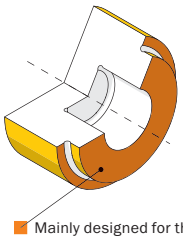

Mainly designed for these surfaces

Also possible depending on fixation type

Drawing shows: TE3.1616.90 R

h	b	Part number	Webcode www.simtek.com/webcode	f	h1 js14	h2	L1	L2	Screw	Screw driver	Connectcode www.simtek.com/ccode	
mm/inch	mm/inch			mm/inch	mm/inch	mm/inch	mm/inch	mm/inch				
16,0	16,0	**TE3.1616.90 R/L**	R ASD7 L ASD8	23,0	16,0	9,0	125,0	15,0	TE3 M5x15 T20R	T20R	R TE3.L.5.3 L TE3.R.5.3	
20,0	20,0	**TE3.2020.90 R/L**	R APXG L AABH	27,0	20,0	5,0	125,0	15,0	TE3 M5x15 T20R	T20R	R TE3.L.5.3 L TE3.R.5.3	
25,0	25,0	**TE3.2525.90 R/L**	R AC7J L AGSY	32,0	25,0	-	150,0	-	TE3 M5x15 T20R	T20R	R TE3.L.5.3 L TE3.R.5.3	
0.625“	0.625“	**TE3.0.625.90 R/L**	R A5TD L A5TF	0.906“	0.630“	0.354“	4.921“	0.591“	TE3 M5x15 T20R	T20R	R TE3.L.5.3 L TE3.R.5.3	inch
0.750“	0.750“	**TE3.0.750.90 R/L**	R A5TK L A5TH	1.063“	0.787“	0.197“	4.921“	0.591“	TE3 M5x15 T20R	T20R	R TE3.L.5.3 L TE3.R.5.3	inch
1.000“	1.000“	**TE3.1.000.90 R/L**	R A5TN L A5TQ	1.260“	0.984“	-	4.921“	-	TE3 M5x15 T20R	T20R	R TE3.L.5.3 L TE3.R.5.3	inch

Order example: **TE3.2020.90 R** (R = Right hand version)

Toolholder, For Internal Applications, Type A

Toolholder for internal applications. For use in smaller bore diameters.
Depth of cut up to 5,0 mm with maximum width of 5,29 mm.

Tightening torque (screw)

6,0 Nm

TW ST | R | Legend 42

Scan QR-Code | Or Visit **www.simtek.info/cp/318**

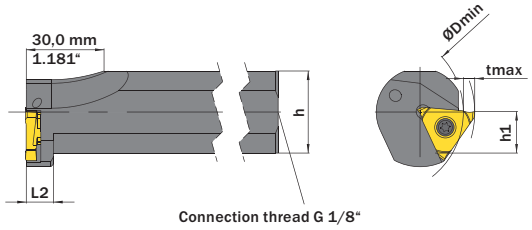

TE3.0025.A.00 R /L, TE3.0032.A.00 R/L

Bore diameter (ØDmin)	tmax
Ø43,0 mm / Ø1.693"	1,0 mm / 0.039"
Ø44,0 mm / Ø1.732"	2,0 mm / 0.079"
Ø46,0 mm / Ø1.811"	3,0 mm / 0.118"
Ø50,0 mm / Ø1.969"	4,0 mm / 0.158"
Ø90,0 mm / Ø3.543"	5,0 mm / 0.197"

TE3.0040.A.00 R/L

Bore diameter (ØDmin)	tmax
Ø49,0 mm / Ø1.929"	1,0 mm / 0.039"
Ø50,0 mm / Ø1.969"	2,0 mm / 0.079"
Ø52,0 mm / Ø2.047"	3,0 mm / 0.118"
Ø54,0 mm / Ø2.126"	4,0 mm / 0.158"
Ø120,0 mm / Ø4.724"	5,0 mm / 0.197"

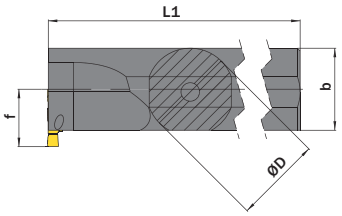

Drawing shows: TE3.0032.A.00 R

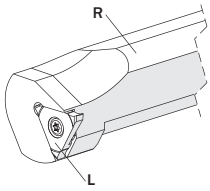

Please use right hand toolholder with left hand insert and vice versa.

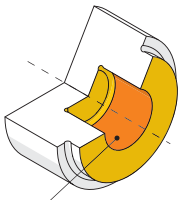

Mainly designed for these surfaces

Also possible depending on insert type

ØD g6 mm	Part number	Webcode www.simtek.com/webcode	b mm	f mm	h mm	h1 mm	L1 mm	L2 mm	Screw	Screw driver	Connectcode www.simtek.com/ccode
25,0	**TE3.0025.A.00 R/L**	R ACA5 L AH48	25,0	18,5	23,0	11,5	170,0	10,0	TE3 M5x15 T20R	T20R	R TE3.L.5.3 L TE3.R.5.3
32,0	**TE3.0032.A.00 R/L**	R ANDC L AG06	30,0	20,0	30,0	15,0	200,0	10,0	TE3 M5x15 T20R	T20R	R TE3.L.5.3 L TE3.R.5.3
40,0	**TE3.0040.A.00 R/L**	R AJSM L AJFN	38,0	24,0	38,0	19,0	250,0	10,0	TE3 M5x15 T20R	T20R	R TE3.L.5.3 L TE3.R.5.3

Order example: **TE3.0025.A.00 R** (R = Right hand version)

Designed for cutting widths of up to 5,29 mm

Toolholder, For Internal Applications, Type C

Toolholder for internal applications. Depth of cut up to 3,0 mm (0.118“) without limitation toward cutting width.

Tightening torque (screw)
6,0 Nm

TW ST | R | Legend 42

Scan QR-Code | Or Visit **www.simtek.info/cp/484**

This page contains inch tools! These tools are indicated by **inch** on the right hand side.

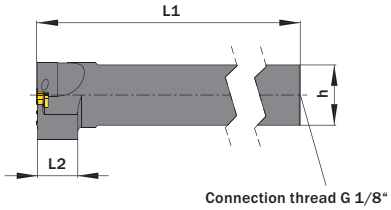

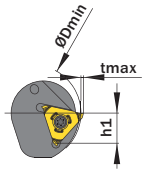

TE3.0025.C.00 R /L, TE3.0032.C.00 R/L

Bore diameter (ØDmin)	tmax
Ø50,0 mm / Ø1.969“	1,0 mm / 0.039“
Ø53,0 mm / Ø2.087”	2,0 mm / 0.079“
Ø110,0 mm / Ø4.331”	3,0 mm / 0.118”

TE3.0040.C.00 R/L

Bore diameter (ØDmin)	tmax
Ø52,0 mm / Ø2.047“	1,0 mm / 0.039“
Ø70,0 mm / Ø2.756”	2,0 mm / 0.079“
Ø150,0 mm / Ø5.906”	3,0 mm / 0.118”

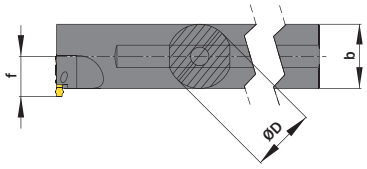

Drawing shows: TE3.0032.C.00 R

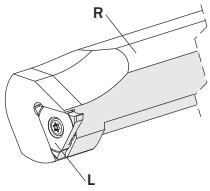

Please use right hand toolholder with left hand insert and vice versa.

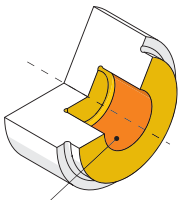

Mainly designed for these surfaces

Also possible depending on insert type

ØD g6 mm/inch	Part number	Webcode www.simtek.com/webcode	b mm/inch	f mm/inch	h mm/inch	h1 js14 mm/inch	L1 mm/inch	L2 mm/inch	Screw	Screw driver	Connectcode www.simtek.com/ccode	
25,0	**TE3.0025.C.00 R/L**	R ASDC L ASBT	25,0	16,5	23,0	11,5	150,0	20,0	TE3 M5x15 T20R	T20R	R TE3.L.5.3 L TE3.R.5.3	
1.000“	**TE3.1.000.C.00 R/L**	R APT1 L AE59	1.000“	0.650“	1.000“	0.500“	5.906“	0.787“	TE3 M5x15 T20R	T20R	R TE3.L.5.3 L TE3.R.5.3	inch
32,0	**TE3.0032.C.00 R/L**	R ASDE L ASDD	32,0	20,0	30,0	15,0	200,0	20,0	TE3 M5x15 T20R	T20R	R TE3.L.5.3 L TE3.R.5.3	
40,0	**TE3.0040.C.00 R/L**	R ASDG L ASDF	40,0	24,0	38,0	19,0	250,0	20,0	TE3 M5x15 T20R	T20R	R TE3.L.5.3 L TE3.R.5.3	
1.250“	**TE3.1.250.C.00 R/L**	R A5TV L A5TT	1.260“	0.787“	1.181“	0.591“	7.874“	0.787“	TE3 M5x15 T20R	T20R	R TE3.L.5.3 L TE3.R.5.3	inch
1.500“	**TE3.1.500.C.00 R/L**	R A5TZ L A5TX	1.574“	0.945“	1.496“	0.748“	9.843“	0.787“	TE3 M5x15 T20R	T20R	R TE3.L.5.3 L TE3.R.5.3	inch

Order example: **TE3.0025.C.00 R** (R = Right hand version)

Cassette for Modular Tool System TOA

For use on SIMTEK base toolholder with polygon shank according to ISO 26623.

Tightening torque (screw)
6,0 Nm

TW ST R Legend 42

Scan QR-Code Or Visit **www.simtek.info/cp/1184**

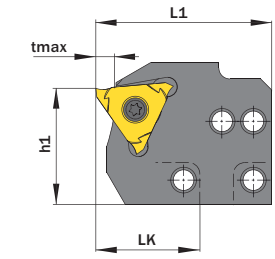

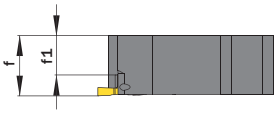

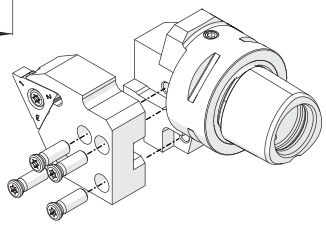

Screw for cassette mounting
T M5x15 T20R

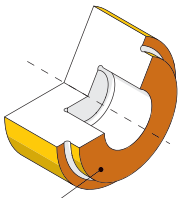

Mainly designed for these surfaces

Also possible depending on fixation type

Drawing shows: TOA.TE3.51.C.29.05 R

Part number	Webcode www.simtek.com/webcode	b mm	f mm	f1 mm	h1 mm	LK mm	L1 mm	tmax mm	Screw	Screw driver	Connectcode www.simtek.com/ccode	Adaptcode
TOA.TE3.51.C.19.05 R/L	R AZBG L AZBF	16,0	16,4	10,8	31,6	19,0	37,9	5,0	TE3 M5x15 T20R	T20R	R TE3.R.5.3 L TE3.L.5.3	TOA
TOA.TE3.51.C.29.05 R/L	R AZBE L AZBD	16,0	16,4	10,8	31,6	29,0	47,9	5,0	TE3 M5x15 T20R	T20R	R TE3.R.5.3 L TE3.L.5.3	TOA

Order example: **TOA.TE3.51.C.29.05 R** (R = Right hand version)

Height-Adjustable Cassette for Back Operations

Cassette for height-adjustable back operations tools.
Compatible to TOG-system by precium.

Tightening torque (screw)
6,0 Nm

TW ST Legend **42**

Scan **QR-Code** Or Visit **www.simtek.info/cp/975**

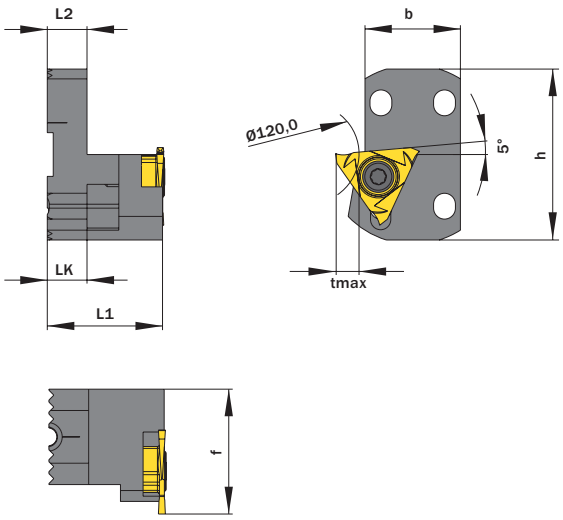

Drawing shows: TOG.K.TE3.A1 R

With through coolant supply	Part number	Webcode www.simtek.com/webcode	b mm	h mm	f mm	L1 mm	L2 mm	LK mm	tmax mm	Screw	Screw driver	Connectcode www.simtek.com/ccode
No	**TOG.K.TE3.A1 R/L**	R AT4D L AT4C	24,0	43,0	31,4	29,0	10,0	10,0	4,5	TE3 M5x15 T20R	T20R	R TE3.R.5.3 L TE3.L.5.3
Yes	**TOG.K.TE3.B1 R/L**	R AT4H L AT4G	24,0	43,0	31,4	46,0	27,0	10,0	4,5	TE3 M5x15 T20R	T20R	R TE3.R.5.3 L TE3.L.5.3

Order example: **TOG.K.TE3.A1 R** (R = Right hand version)

Grooving, circlip ring grooves

Circlip ring grooves comp. to DIN 471/472 and DIN 983/984.

Cutting parameters (start)		
f (ext.) **0,04 mm/U**	f (int.) **0,03 mm/U**	Vc **Page 45**

Suitable toolholders on page
9, 10, 11, 12, 42, 13, 14

SP HM R Legend 42

Scan QR-Code Or Visit **www.simtek.info/cp/308**

This page contains inch tools! These tools are indicated by **inch** on the right hand side.

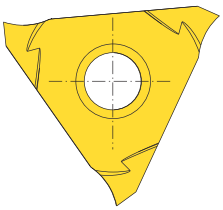

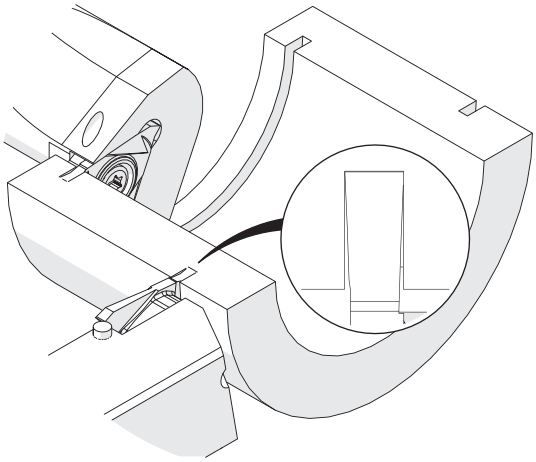

Drawing shows: TE3.0215.00 GR

Nominal width of groove	w -0,05mm / -0.002"	Part number	Webcode www.simtek.com/webcode	Our first choice	S	tmax	Connectcode www.simtek.com/ccode	
mm/inch	mm/inch			P K M N S	mm/inch	mm/inch		
0,5	0,57	**TE3.0050.00 G R/L**	R AH0J L AF84	X808 X408	5,45	1,43	R TE3.R.5.3 L TE3.L.5.3	
0,6	0,67	**TE3.0060.00 G R/L**	R ADA6 L ADCK	X808 X408	5,45	1,68	R TE3.R.5.3 L TE3.L.5.3	
0,7	0,77	**TE3.0070.00 G R/L**	R AJ4V L AAUT	X808 X408	5,45	1,93	R TE3.R.5.3 L TE3.L.5.3	
0,8	0,87	**TE3.0080.00 G R/L**	R APHD L ADJM	X808 X408	5,45	2,18	R TE3.R.5.3 L TE3.L.5.3	
0,9	0,97	**TE3.0090.00 G R/L**	R AGBW L ANNB	X808 X408	5,45	2,43	R TE3.R.5.3 L TE3.L.5.3	
1,0	1,07	**TE3.0100.00 G R/L**	R AFBT L AKEK	X808 X408	5,45	2,68	R TE3.R.5.3 L TE3.L.5.3	
1,1	1,24	**TE3.0110.00 G R/L**	R AP21 L AJJB	X800 X400	5,6	5,0	R TE3.R.5.3 L TE3.L.5.3	
1,1	1,24	**TE3.0110.31 G R/L**	R AQBU L AQBS	X800 X400	5,6	3,1	R TE3.R.5.3 L TE3.L.5.3	
0.046"	0.052"	**TE3.0117.00 GR**	A4XX	X800 X400	0.220"	0.197"	TE3.R.5.3	inch
1,3	1,44	**TE3.0130.00 G R/L**	R AHV0 L AD91	X800 X400	5,6	5,0	R TE3.R.5.3 L TE3.L.5.3	
1,6	1,74	**TE3.0160.00 G R/L**	R AD0B L AH1Z	X800 X400	5,6	5,0	R TE3.R.5.3 L TE3.L.5.3	
1,85	1,99	**TE3.0185.00 G R/L**	R APGF L AMV5	X800 X400	5,6	5,0	R TE3.R.5.3 L TE3.L.5.3	
2,15	2,29	**TE3.0215.00 G R/L**	R AB92 L AKUE	X800 X400	5,6	5,0	R TE3.R.5.3 L TE3.L.5.3	
2,65	2,79	**TE3.0265.00 G R/L**	R AKW4 L ABJZ	X800 X400	5,6	5,0	R TE3.R.5.3 L TE3.L.5.3	
3,15	3,29	**TE3.0315.00 G R/L**	R AJQN L AHE6	X800 X400	5,6	5,0	R TE3.R.5.3 L TE3.L.5.3	
4,15	4,29	**TE3.0415.00 G R/L**	R AFAK L AE23	X800 X400	5,6	5,0	R TE3.R.5.3 L TE3.L.5.3	
5,15	5,29	**TE3.0515.00 G R/L**	R AE14 L AF57	X800 X400	5,6	5,0	R TE3.R.5.3 L TE3.L.5.3	

Order example: **TE3.0130.00 G R X800** (R = Right hand version, X800 = Grade)

simtek individual | TE3. w, 1/100 mm, 4 Digits . R, 1/100 mm , 3 Digits Tolerance R/L

Example Part number: **TE3.0156.015 XN R** or **TE3.0156.015 XN L**

Grooving, Circlip Ring Grooves, with ground chip form channel

Circlip ring grooves comp. to DIN 471/472 and DIN 983/984, with chip form channel.

Cutting parameters (start)		
f (ext.) **0,04 mm/U**	f (int.) **0,03 mm/U**	Vc **Page 45**

Suitable toolholders on page
9, 10, 11, 12, 13, 14

SP HM R Legend **42**

Scan **QR-Code** Or Visit **www.simtek.info/cp/884**

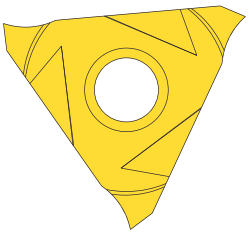

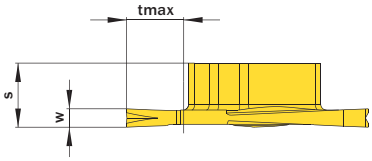

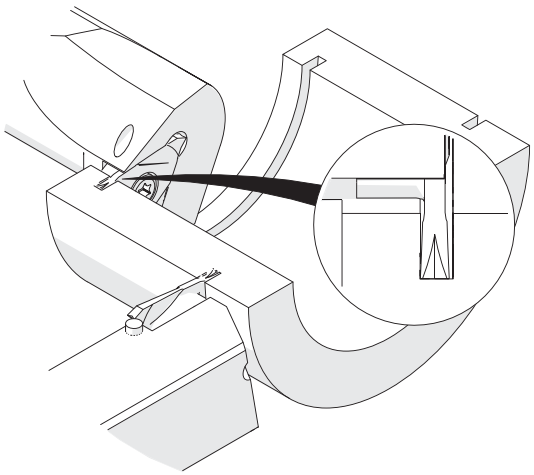

Drawing shows: TE3.0160.00 GT R

Nominal width of groove mm	w -0,05 mm	With chip form channel	Part number	Webcode www.simtek.com/webcode	Our first choice P K M N S	S mm	tmax mm	Connectcode www.simtek.com/ccode
1,1	1,24	Yes	**TE3.0110.00 GT R/L**	R AT0M L AT0N	X800 X400	5,6	5,0	R TE3.R.5.3 L TE3.L.5.3
1,3	1,44	Yes	**TE3.0130.00 GT R/L**	R AT0P L AT0Q	X800 X400	5,6	5,0	R TE3.R.5.3 L TE3.L.5.3
1,6	1,74	Yes	**TE3.0160.00 GT R/L**	R AT0S L AT0T	X800 X400	5,6	5,0	R TE3.R.5.3 L TE3.L.5.3
1,85	1,99	Yes	**TE3.0185.00 GT R/L**	R AT0U L AT0V	X800 X400	5,6	5,0	R TE3.R.5.3 L TE3.L.5.3
2,15	2,29	Yes	**TE3.0215.00 GT R/L**	R AT0W L AT0X	X800 X400	5,6	5,0	R TE3.R.5.3 L TE3.L.5.3

Order example: **TE3.0185.00 GT R X800** (R = Right hand version, X800 = Grade)

Grooving, Circlip Ring Grooves with Chamfer

Circlip ring grooves comp. to DIN 471/472 and DIN 983/984, with chamfer.

Cutting parameters (start)		
f (ext.) **0,04 mm/U**	f (int.) **0,03 mm/U**	Vc **Page 45**

Suitable toolholders on page
9, 10, 11, 12, 13, 14

SP HM R Legend **42**

Scan QR-Code Or Visit **www.simtek.info/cp/332**

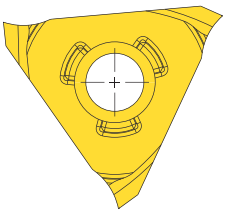

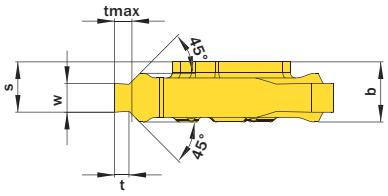

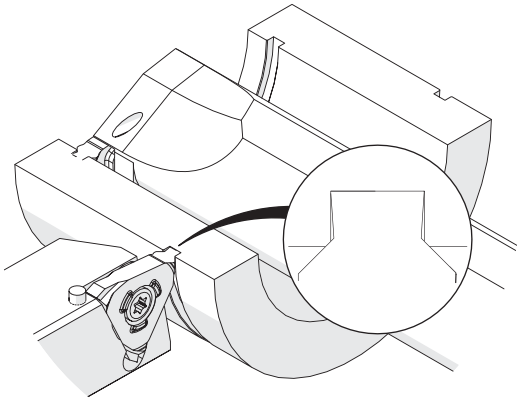

Drawing shows: TE3.2616.00 F R

Nominal width of groove mm	w -0,05 mm	Part number	Webcode www.simtek.com/webcode	Our first choice P K M N S	b mm	S mm	t mm	tmax mm	Connectcode www.simtek.com/ccode
▼ **Nominal width of groove = 1,1 mm**									
1,1	1,24	**TE3.1105.00 F R/L**	R AFC9 L AN28	X800 X400	5,8	5,37	0,36	0,4	R TE3.R.5.3 L TE3.L.5.3
▼ **Nominal width of groove = 1,3 mm**									
1,3	1,44	**TE3.1306.00 F R/L**	R AEQZ L AMVQ	X800 X400	5,8	5,47	0,45	0,55	R TE3.R.5.3 L TE3.L.5.3
▼ **Nominal width of groove = 1,6 mm**									
1,6	1,74	**TE3.1607.00 F R/L**	R AACQ L APPJ	X800 X400	5,8	5,49	0,6	0,7	R TE3.R.5.3 L TE3.L.5.3
1,6	1,74	**TE3.1608.00 F R/L**	R AK00 L ABUB	X800 X400	5,8	5,49	0,75	0,85	R TE3.R.5.3 L TE3.L.5.3
1,6	1,74	**TE3.1609.00 F R/L**	R AJ0M L ANCC	X800 X400	5,8	5,49	0,85	1,0	R TE3.R.5.3 L TE3.L.5.3
▼ **Nominal width of groove = 1,85 mm**									
1,85	1,99	**TE3.1810.00 F R/L**	R ACD6 L ANG2	X800 X400	5,8	5,47	0,85	1,0	R TE3.R.5.3 L TE3.L.5.3
1,85	1,99	**TE3.1812.00 F R/L**	R ABE7 L AG5M	X800 X400	5,8	5,47	1,1	1,25	R TE3.R.5.3 L TE3.L.5.3
▼ **Nominal width of groove = 2,15 mm**									
2,15	2,29	**TE3.2115.00 F R/L**	R AB8G L AGPQ	X800 X400	5,8	5,17	1,35	1,5	R TE3.R.5.3 L TE3.L.5.3
▼ **Nominal width of groove = 2,65 mm**									
2,65	2,79	**TE3.2616.00 F R/L**	R ADY6 L ANB3	X800 X400	5,8	5,37	1,35	1,5	R TE3.R.5.3 L TE3.L.5.3
2,65	2,79	**TE3.2617.00 F R/L**	R ACFT L APV8	X800 X400	5,8	5,37	1,6	1,75	R TE3.R.5.3 L TE3.L.5.3
▼ **Nominal width of groove = 3,15 mm**									
3,15	3,29	**TE3.3118.00 F R/L**	R AC3K L AKVF	X800 X400	5,8	5,12	1,6	1,75	R TE3.R.5.3 L TE3.L.5.3
▼ **Nominal width of groove = 4,15 mm**									
4,15	4,29	**TE3.4120.00 F R/L**	R AAGD L AAGN	X800 X400	5,8	5,12	1,85	2,0	R TE3.R.5.3 L TE3.L.5.3
4,15	4,29	**TE3.4125.00 F R/L**	R AFPP L APTT	X800 X400	5,8	5,12	2,35	2,5	R TE3.R.5.3 L TE3.L.5.3
▼ **Nominal width of groove = 5,15 mm**									
5,15	5,29	**TE3.5130.00 F R/L**	R ADWB L AF7M	X800 X400	6,6	5,82	2,85	3,0	R TE3.R.5.3 L TE3.L.5.3

Order example: **TE3.2115.00 F R X800** (R = Right hand version, X800 = Grade)

Grooving and profiling

CNC profiling.

Cutting parameters (start)		
f (ext.) **0,04 mm/U**	f (int.) **0,03 mm/U**	Vc **Page 45**

Suitable toolholders on page
9, 10, 11, 12, 13, 14

SP CBN | SP HM | R | Legend 42

Scan QR-Code | Or Visit **www.simtek.info/cp/309**

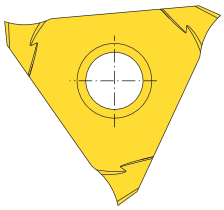

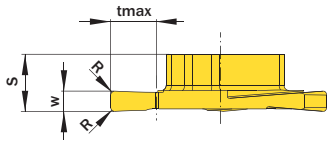

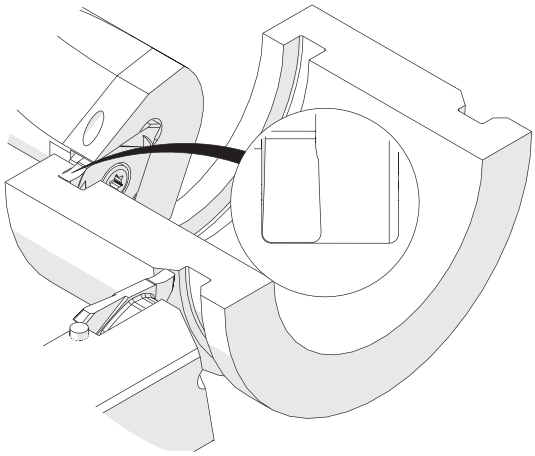

Drawing shows: TE3.0200.04 NR

w ±0,02 mm	R mm	Part number	Webcode www.simtek.com/webcode	Our first choice P K M N S	S mm	tmax mm	Connectcode www.simtek.com/ccode
▼ R = 0,05 mm							
1,0	0,05	**TE3.0100.005 N R/L**	R A1T4 L A41Z	X808 X408	5,45	2,5	R TE3.R.5.3 L TE3.L.5.3
▼ R = 0,2 mm							
1,0	0,2	**TE3.0100.02 N R/L**	R AUKW L AUKX	X808 X408	5,45	2,5	R TE3.R.5.3 L TE3.L.5.3
1,5	0,2	**TE3.0150.02 N R/L**	R AGUC L AJC0	X800 X400	5,6	5,0	R TE3.R.5.3 L TE3.L.5.3
2,0	0,2	**TE3.0200.02 N R/L**	R AAFU L AMG1	X800 X400	5,6	5,0	R TE3.R.5.3 L TE3.L.5.3
2,5	0,2	**TE3.0250.02 N R/L**	R AQHV L AQHW	X800 X400	5,55	5,0	R TE3.R.5.3 L TE3.L.5.3
3,0	0,2	**TE3.0300.02 N R/L**	R AEY1 L AJYY	X800 X400	5,55	5,0	R TE3.R.5.3 L TE3.L.5.3
4,0	0,2	**TE3.0400.02 N R/L**	R ABXC L AB96	X800 X400	5,6	5,0	R TE3.R.5.3 L TE3.L.5.3
▼ R = 0,4 mm							
2,0	0,4	**TE3.0200.04 N R/L**	R AQMV L AQMW	X800 X400	5,6	5,0	R TE3.R.5.3 L TE3.L.5.3
2,5	0,4	**TE3.0250.04 N R/L**	R AG8Y L AGBH	X800 X400	5,6	5,0	R TE3.R.5.3 L TE3.L.5.3
3,0	0,4	**TE3.0300.04 N R/L**	R AQHY L AQHX	X800 X400	5,6	5,0	R TE3.R.5.3 L TE3.L.5.3
4,0	0,4	**TE3.0400.04 N R/L**	R ASE2 L ASE1	X800 X400	5,6	5,0	R TE3.R.5.3 L TE3.L.5.3
▼ R = 0,6 mm							
3,0	0,6	**TE3.0300.06 N R/L**	R AT61 L AT60	X800 X400	5,6	5,0	R TE3.R.5.3 L TE3.L.5.3
▼ R = 0,8 mm							
3,0	0,8	**TE3.0300.08 N R/L**	R AT7T L AT7S	X800 X400	5,6	5,0	R TE3.R.5.3 L TE3.L.5.3

Order example: **TE3.0200.02 N R X800** (R = Right hand version, X800 = Grade)

simtek individual | TE3. w, 1/100 mm, 4 Digits . R, 1/100 mm, 3 Digits Tolerance R/L
Example Part number: **TE3.0156.015 XN R** or **TE3.0156.015 XN L**

Grooving and Profiling, Two ground chip form channels

Grooving and turning. CNC profiling. With two ground chip form channels.

Cutting parameters (start)		
f (ext.) **0,04 mm/U**	f (int.) **0,03 mm/U**	Vc **Page 45**

Suitable toolholders on page
9, 10, 11, 12, 13, 14

SP HM R Legend **42**

Scan **QR-Code** Or Visit **www.simtek.info/cp/951**

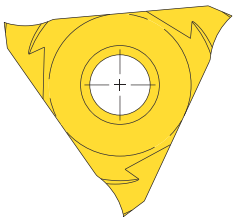

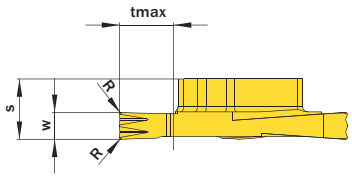

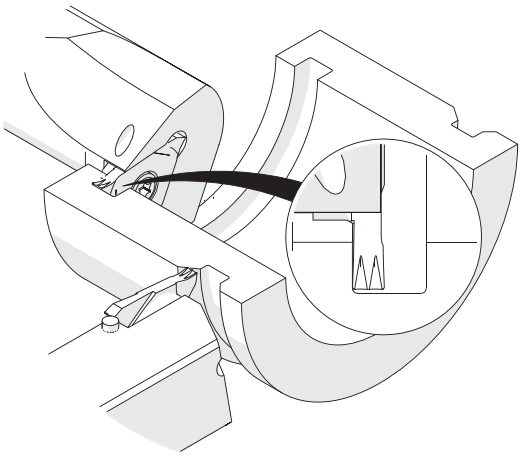

Drawing shows: TE3.0250.02 NW R

w -0,05	R	Part number	Webcode www.simtek.com/webcode	Our first choice	S	tmax	Connectcode www.simtek.com/ccode
mm	mm			P K M N S	mm	mm	
2,5	0,2	**TE3.0250.02 NW R/L**	R AUQT L AZ43	X800 X400	5,6	5,0	R TE3.R.5.3 L TE3.L.5.3

Order example: **TE3.0250.02 NW R X800** (R = Right hand version, X800 = Grade)

Grooving and Profiling in light alloys

CNC Profiling.

Cutting parameters (start)		
f (ext.) **0,04 mm/U**	f (int.) **0,03 mm/U**	Vc **Page 45**

Suitable toolholders on page
9, 10, 11, 12, 11, 11, 13, 14

SP HM | R | LM | Legend 42

Scan QR-Code | Or Visit **www.simtek.info/cp/494**

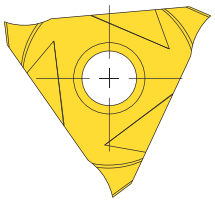

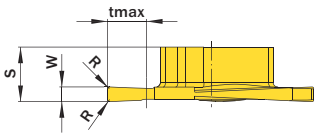

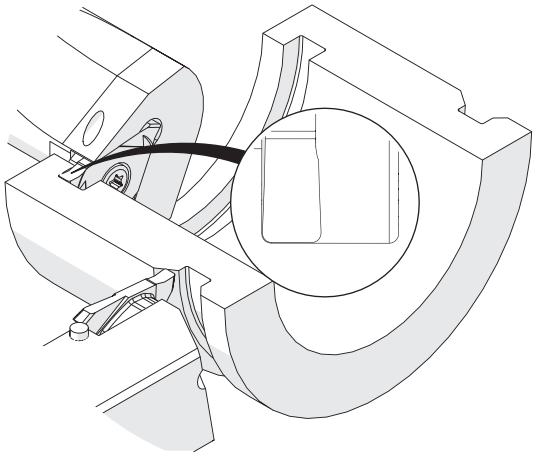

Drawing shows: TE3.0150.02 NC R

w ±0,03 mm	R mm	Part number	Webcode www.simtek.com/webcode	Our first choice P K M N S	S mm	tmax mm	Connectcode www.simtek.com/ccode
1,5	0,2	**TE3.0150.02 NC R**	AGJT	X808 X408	5,6	5,0	TE3.R.5.3
2,0	0,2	**TE3.0200.02 NC R**	AK62	X808 X408	5,6	5,0	TE3.R.5.3

Order example: **TE3.0200.02 NC R X408** (R = Right hand version, X408 = Grade)

Grooving and profiling, full radius

Full radius, CNC profiling.

Cutting parameters (start)		
f (ext.) **0,04 mm/U**	f (int.) **0,03 mm/U**	Vc **Page 45**

Suitable toolholders on page
9, 10, 11, 12, 11, 11, 13, 14

SP HM R Legend **42**

Scan **QR-Code** Or Visit **www.simtek.info/cp/310**

This page contains inch tools! These tools are indicated by **inch** on the right hand side.

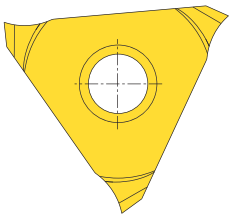

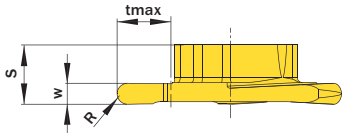

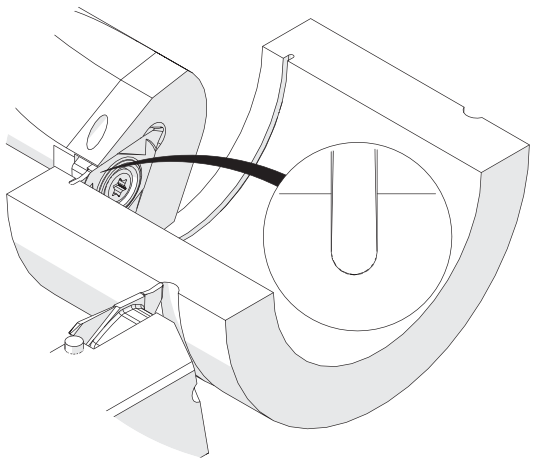

Drawing shows: TE3.0200.10 VR

w +0,04mm / 0.002"	R	Part number	Webcode www.simtek.com/webcode	Our first choice	S	tmax	Connectcode www.simtek.com/ccode	
mm/inch	mm/inch			P K M N S	mm/inch	mm/inch		
1,0	0,5	**TE3.0100.05 V R/L**	R AA7W L ANCX	X800 X400	5,45	2,5	R TE3.R.5.3 L TE3.L.5.3	
1,2	0,6	**TE3.0120.06 V R/L**	R AHPN L AK8F	X800 X400	5,6	3,0	R TE3.R.5.3 L TE3.L.5.3	
1,5	0,75	**TE3.0150.07 V R/L**	R AT74 L AT73	X800 X400	5,6	5,0	R TE3.R.5.3 L TE3.L.5.3	
0.062"	0.031"	**TE3.0157.079 VR**	A449	X800 X400	0.220"	0197"	TE3.R.5.3	inch
1,6	0,8	**TE3.0160.08 V R/L**	R AB6N L AJAC	X800 X400	5,6	5,0	R TE3.R.5.3 L TE3.L.5.3	
1,8	0,9	**TE3.0180.09 V R/L**	R AFP3 L AKC9	X800 X400	5,6	5,0	R TE3.R.5.3 L TE3.L.5.3	
2,0	1,0	**TE3.0200.10 V R/L**	R APHH L ACYV	X800 X400	5,6	5,0	R TE3.R.5.3 L TE3.L.5.3	
2,2	1,1	**TE3.0220.11 V R/L**	R AJ0Q L ANTV	X800 X400	5,6	5,0	R TE3.R.5.3 L TE3.L.5.3	
2,5	1,25	**TE3.0250.12 V R/L**	R AAFE L AMTK	X800 X400	5,6	5,0	R TE3.R.5.3 L TE3.L.5.3	
2,8	1,4	**TE3.0280.14 V R/L**	R ANA5 L AMFA	X800 X400	5,6	5,0	R TE3.R.5.3 L TE3.L.5.3	
3,0	1,5	**TE3.0300.15 V R/L**	R AB7P L AD5J	X800 X400	5,6	5,0	R TE3.R.5.3 L TE3.L.5.3	
3,6	1,8	**TE3.0360.18 V R/L**	R AT00 L AT01	X800 X400	5,6	5,0	R TE3.R.5.3 L TE3.L.5.3	
4,0	2,0	**TE3.0400.20 V R/L**	R ANK8 L APDZ	X800 X400	5,6	5,0	R TE3.R.5.3 L TE3.L.5.3	

Order example: **TE3.0160.08 V R X800** (R = Right hand version, X800 = Grade)

simturn E3
SIMTEK Turning Tools Type E3

Threading, Metr. ISO, external, full profile

For a complete thread profile with correct depth, top radius and bottom radius.

Cutting parameters (start)
Number of passes **8 - 12**
Recom. infeed method **Flank infeed**
Vc **Page 45**

Suitable toolholders on page
9, 10, 11, 12, 11, 11, 13, 14

SP HM | R | Legend 42

Scan QR-Code | Or Visit **www.simtek.info/cp/313**

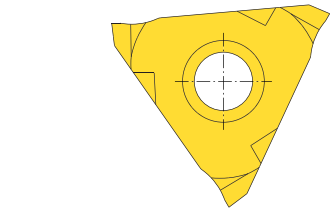

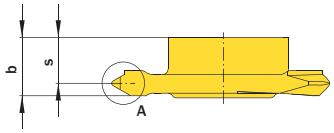

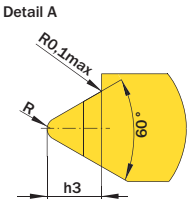

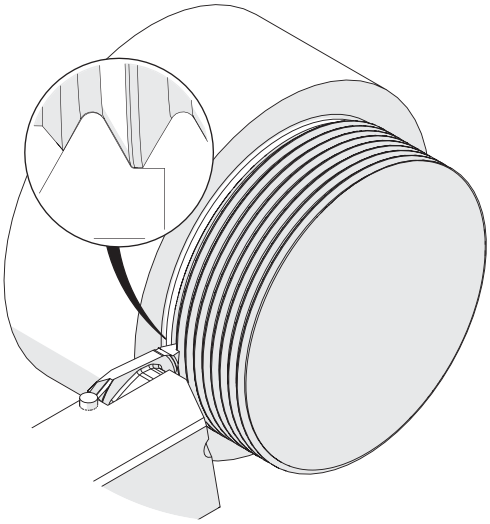

Drawing shows: TE3.MT20.02 EM R

Pitch (as of) mm	Part number	Webcode www.simtek.com/webcode	Our first choice P K M N S	b mm	h3 mm	R mm	S mm	Connectcode www.simtek.com/ccode
0,5	**TE3.MT05.02 EM R/L**	R AV91 L AV92	X800 X400	5,6	0,31	0,07	4,8	R TE3.R.5.3 L TE3.L.5.3
0,75	**TE3.MT07.02 EM R/L**	R AQVT L ATWK	X800 X400	5,6	0,46	0,11	4,8	R TE3.R.5.3 L TE3.L.5.3
0,8	**TE3.MT08.02 EM R/L**	R ASFS L ATWM	X800 X400	5,6	0,49	0,12	4,7	R TE3.R.5.3 L TE3.L.5.3
1,0	**TE3.MT10.02 EM R/L**	R AFHK L ANBA	X800 X400	5,6	0,61	0,14	4,6	R TE3.R.5.3 L TE3.L.5.3
1,25	**TE3.MT12.02 EM R/L**	R ABFQ L AEP4	X800 X400	5,6	0,77	0,18	4,5	R TE3.R.5.3 L TE3.L.5.3
1,5	**TE3.MT15.02 EM R/L**	R AKFX L ABVJ	X800 X400	5,6	0,92	0,22	4,4	R TE3.R.5.3 L TE3.L.5.3
1,75	**TE3.MT17.02 EM R/L**	R AHWM L AJFB	X800 X400	5,6	1,07	0,25	4,1	R TE3.R.5.3 L TE3.L.5.3
2,0	**TE3.MT20.02 EM R/L**	R ABX6 L AHXC	X800 X400	5,6	1,23	0,29	4,1	R TE3.R.5.3 L TE3.L.5.3
2,5	**TE3.MT25.02 EM R/L**	R ADA1 L AAXP	X800 X400	5,6	1,53	0,36	3,9	R TE3.R.5.3 L TE3.L.5.3
3,0	**TE3.MT30.02 EM R/L**	R AMUN L ANFC	X800 X400	5,6	1,84	0,43	3,8	R TE3.R.5.3 L TE3.L.5.3
3,5	**TE3.MT35.02 EM R/L**	R AP36 L AM6F	X800 X400	5,6	2,15	0,51	3,5	R TE3.R.5.3 L TE3.L.5.3
4,0	**TE3.MT40.02 EM R/L**	R AAAW L AAFC	X800 X400	5,6	2,45	0,58	3,6	R TE3.R.5.3 L TE3.L.5.3
5,0	**TE3.MT50.02 EM R/L**	R AB6F L AMYX	X800 X400	5,95	3,07	0,72	3,55	R TE3.R.5.3 L TE3.L.5.3
6,0	**TE3.MT60.02 EM R/L**	R AGXM L AMSW	X800 X400	6,6	3,68	0,87	3,5	R TE3.R.5.3 L TE3.L.5.3

Order example: **TE3.MT15.02 EM R X800** (R = Right hand version, X800 = Grade)

simturn E3
SIMTEK Turning Tools Type E3

Threading, Metr. ISO, External, Partial Profile

Multi-purpose tools, usable for different pitches.

Cutting parameters (start)

Number of passes
8 - 12

Recom. infeed method
Flank infeed

Vc
Page 45

Suitable toolholders on page
9, 10, 11, 12, 11, 11, 13, 14

Please read add. notes
T01 (Page 41)

SP HM | R | Legend 42

Scan QR-Code | Or Visit **www.simtek.info/cp/312**

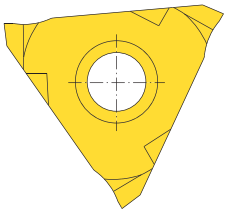

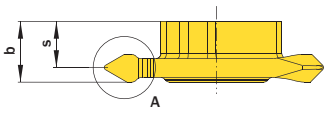

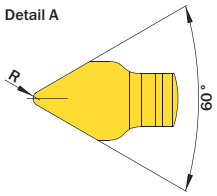

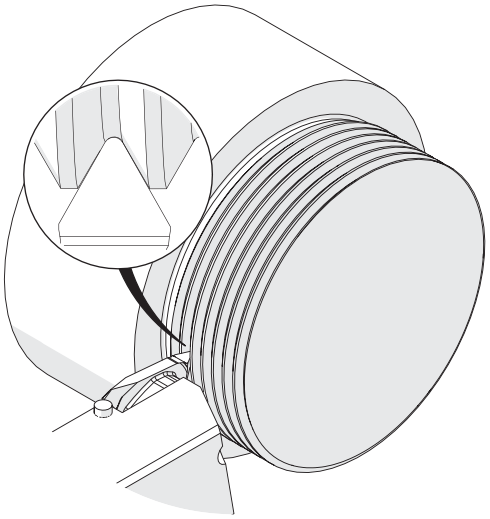

Drawing shows: TE3.MT20.01 EM R

Pitch (as of) mm	Part number	Webcode www.simtek.com/webcode	Our first choice P K M N S	Pitch (up to) mm	b mm	R mm	S mm	Connectcode www.simtek.com/ccode
0,5	**TE3.MT05.01 EM R/L**	R ATWJ L ATTY	X800 X400	1,0	5,6	0,07	4,7	R TE3.R.5.3 L TE3.L.5.3
1,0	**TE3.MT10.01 EM R/L**	R AECT L AKJ3	X800 X400	1,5	5,6	0,14	4,6	R TE3.R.5.3 L TE3.L.5.3
1,25	**TE3.MT12.01 EM R/L**	R AJSY L AA7M	X800 X400	1,75	5,6	0,18	4,5	R TE3.R.5.3 L TE3.L.5.3
1,5	**TE3.MT15.01 EM R/L**	R AP1X L ANZ6	X800 X400	2,0	5,8	0,2	4,4	R TE3.R.5.3 L TE3.L.5.3
1,75	**TE3.MT17.01 EM R/L**	R AGJZ L AJZA	X800 X400	2,5	5,6	0,25	4,1	R TE3.R.5.3 L TE3.L.5.3
2,0	**TE3.MT20.01 EM R/L**	R AHCM L AAJY	X800 X400	2,5	5,6	0,29	4,1	R TE3.R.5.3 L TE3.L.5.3
2,5	**TE3.MT25.01 EM R/L**	R AB76 L AH2Z	X800 X400	3,0	5,6	0,36	3,9	R TE3.R.5.3 L TE3.L.5.3
3,0	**TE3.MT30.01 EM R/L**	R ANB7 L APBE	X800 X400	3,5	5,6	0,43	3,8	R TE3.R.5.3 L TE3.L.5.3
3,5	**TE3.MT35.01 EM R/L**	R AN82 L AKZ2	X800 X400	4,0	5,6	0,51	3,0	R TE3.R.5.3 L TE3.L.5.3
3,0	**TE3.MT60.01 EM R/L**	R AHBQ L AC7V	X800 X400	6,0	5,85	0,43	3,0	R TE3.R.5.3 L TE3.L.5.3

Order example: **TE3.MT10.01 EM R X800** (R = Right hand version, X800 = Grade)

Please read the additional notes mentioned in the information area on the top right corner of this page.

Threading, Metr. ISO, internal, full profile

For a complete thread profile with correct depth.

Cutting parameters (start)
Number of passes **10 - 16**
Recom. infeed method **Flank infeed**
Vc **Page 45**

Suitable toolholders on page
9, 10, 11, 12, 11, 11, 13, 14

SP HM | R | Legend 42

Scan QR-Code | Or Visit **www.simtek.info/cp/315**

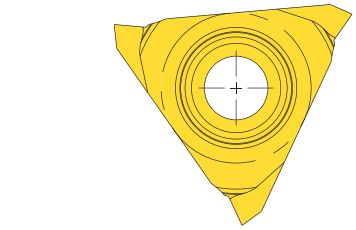

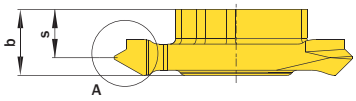

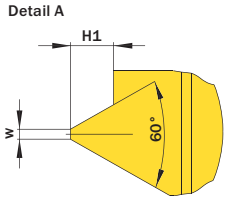

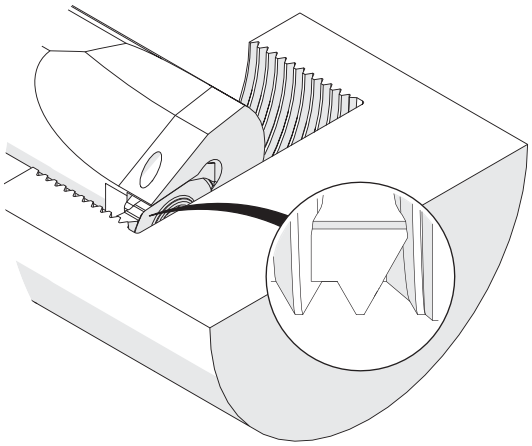

Drawing shows: TE3.MT20.02 IM R

Pitch (as of) mm	Part number	Webcode www.simtek.com/webcode	Our first choice P K M N S	b mm	H1 mm	S mm	w mm	Connectcode www.simtek.com/ccode
1,0	**TE3.MT10.02 IM R**	ABMX	X800 X400	5,6	0,54	4,65	0,12	TE3.R.5.3
1,5	**TE3.MT15.02 IM R**	AMJ3	X800 X400	5,6	0,81	4,45	0,19	TE3.R.5.3
2,0	**TE3.MT20.02 IM R**	AKWM	X800 X400	5,6	1,08	4,25	0,25	TE3.R.5.3
2,5	**TE3.MT25.02 IM R**	AH53	X800 X400	5,6	1,35	4,1	0,31	TE3.R.5.3
3,0	**TE3.MT30.02 IM R**	ABUE	X800 X400	5,6	1,62	3,85	0,38	TE3.R.5.3
3,5	**TE3.MT35.02 IM R**	AFW4	X800 X400	5,6	1,89	3,85	0,44	TE3.R.5.3

Order example: **TE3.MT15.02 IM R X800** (R = Right hand version, X800 = Grade)

simturn E3
SIMTEK Turning Tools Type E3

Threading, Metr. ISO, internal, partial profile

Multi-purpose tools, usable for different pitches.

Cutting parameters (start)
Number of passes **10 - 16**
Recom. infeed method **Flank infeed**
Vc **Page 45**

Suitable toolholders on page
9, 10, 11, 12, 11, 11, 13, 14
Please read add. notes
T01 (Page 41)

SP HM | R | Legend 42

Scan QR-Code | Or Visit **www.simtek.info/cp/314**

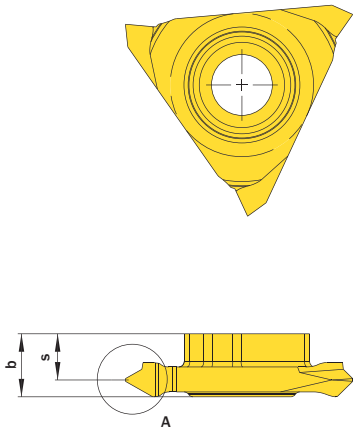

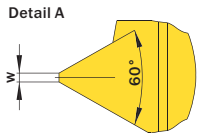

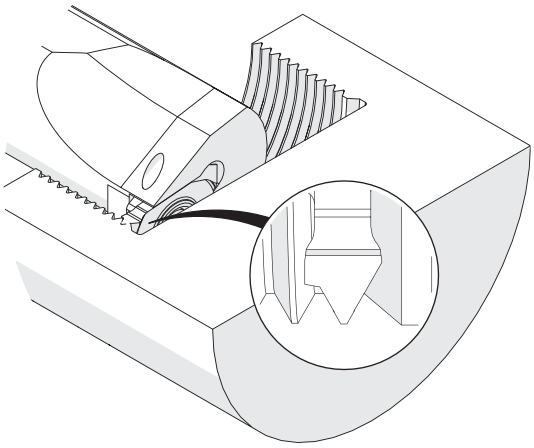

Drawing shows: TE3.MT20.01 IM R

Pitch (as of) mm	Part number	Webcode www.simtek.com/webcode	Our first choice P K M N S	Pitch (up to) mm	b mm	S mm	w mm	Connectcode www.simtek.com/ccode
1,0	**TE3.MT10.01 IM R**	AJ4D	X800 X400	1,5	5,6	4,65	0,12	TE3.R.5.3
1,5	**TE3.MT15.01 IM R**	AADP	X800 X400	2,0	5,6	4,45	0,18	TE3.R.5.3
2,0	**TE3.MT20.01 IM R**	AGQX	X800 X400	2,5	5,6	4,25	0,25	TE3.R.5.3
2,5	**TE3.MT25.01 IM R**	AN3N	X800 X400	3,0	5,6	4,1	0,31	TE3.R.5.3
3,0	**TE3.MT30.01 IM R**	ADFV	X800 X400	3,5	5,6	3,85	0,37	TE3.R.5.3
3,5	**TE3.MT35.01 IM R**	AKVB	X800 X400	4,0	5,6	3,85	0,43	TE3.R.5.3

Order example: **TE3.MT20.01 IM R X400** (R = Right hand version, X400 = Grade)

Please read the additional notes mentioned in the information area on the top right corner of this page.

Threading, External, UN Full Profile

For a complete thread profile with correct depth, top radius and bottom radius. For external application.

Cutting parameters (start)
Number of passes **8 - 12**
Recom. infeed method **Flank infeed**
Vc **Page 45**

Suitable toolholders on page
9, 10, 11, 12, 11, 11, 13, 14

SP HM R Legend 42

Scan QR-Code Or Visit **www.simtek.info/cp/847**

This page contains inch tools! These tools are indicated by inch on the right hand side.

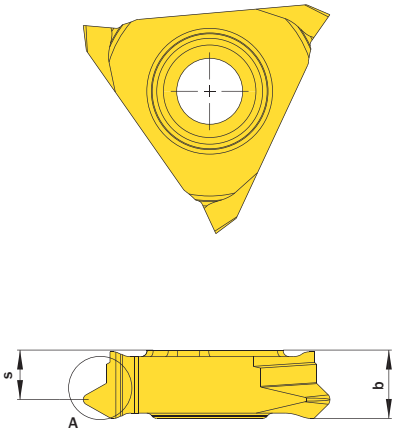

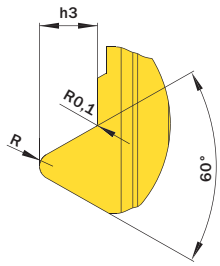

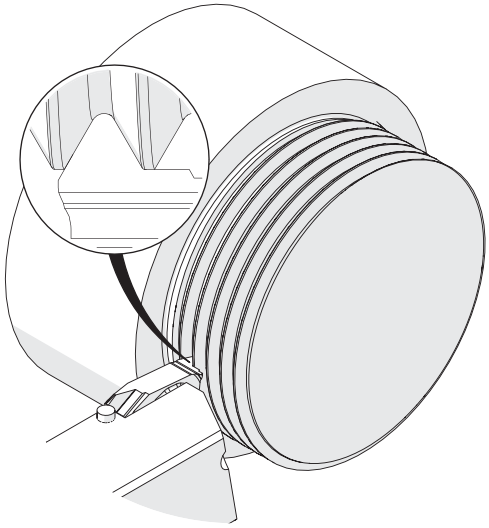

Drawing shows: TE3.UN08.02 EM R

Threads/Inch	Part number	Webcode www.simtek.com/webcode	Our first choice P K M N S	b inch	h3 inch	R inch	S inch	Connectcode www.simtek.com/ccode	
8	**TE3.UN08.02 EM R**	AS82	X800 X400	0.228“	0.077“	0.018“	0.161“	TE3.R.5.3	inch
9	**TE3.UN09.02 EM R**	ATWP	X800 X400	0.228“	0.068“	0.016“	0.169“	TE3.R.5.3	inch
10	**TE3.UN10.02 EM R**	AS84	X800 X400	0.228“	0.061“	0.015“	0.173“	TE3.R.5.3	inch
11	**TE3.UN11.02 EM R**	ATWS	X800 X400	0.228“	0.055“	0.013“	0.177“	TE3.R.5.3	inch
12	**TE3.UN12.02 EM R**	ATWU	X800 X400	0.228“	0.051“	0.012“	0.181“	TE3.R.5.3	inch
14	**TE3.UN14.02 EM R**	AS86	X800 X400	0.228“	0.044“	0.010“	0.185“	TE3.R.5.3	inch
16	**TE3.UN16.02 EM R**	AS88	X800 X400	0.228“	0.038“	0.009“	0.189“	TE3.R.5.3	inch
18	**TE3.UN18.02 EM R**	AS9A	X800 X400	0.228“	0.034“	0.008“	0.193“	TE3.R.5.3	inch
20	**TE3.UN20.02 EM R**	AS9C	X800 X400	0.228“	0.031“	0.007“	0.197“	TE3.R.5.3	inch
24	**TE3.UN24.02 EM R**	AS9E	X800 X400	0.228“	0.026“	0.005“	0.197“	TE3.R.5.3	inch
28	**TE3.UN28.02 EM R**	AS9G	X800 X400	0.228“	0.022“	0.005“	0.201“	TE3.R.5.3	inch
32	**TE3.UN32.02 EM R**	AS9J	X800 X400	0.228“	0.019“	0.004“	0.205“	TE3.R.5.3	inch

Order example: **TE3.UN28.02 EM R X800** (R = Right hand version, X800 = Grade)

Threading, Internal, UN Full Profile

For a complete thread profile with correct depth. For internal application.

Cutting parameters (start)
Number of passes **10 - 16**
Recom. infeed method **Flank infeed**
Vc **Page 45**

Suitable toolholders on page
9, 10, 11, 12, 11, 11, 13, 14

SP HM R Legend 42

Scan QR-Code Or Visit **www.simtek.info/cp/864**

This page contains inch tools! These tools are indicated by inch on the right hand side.

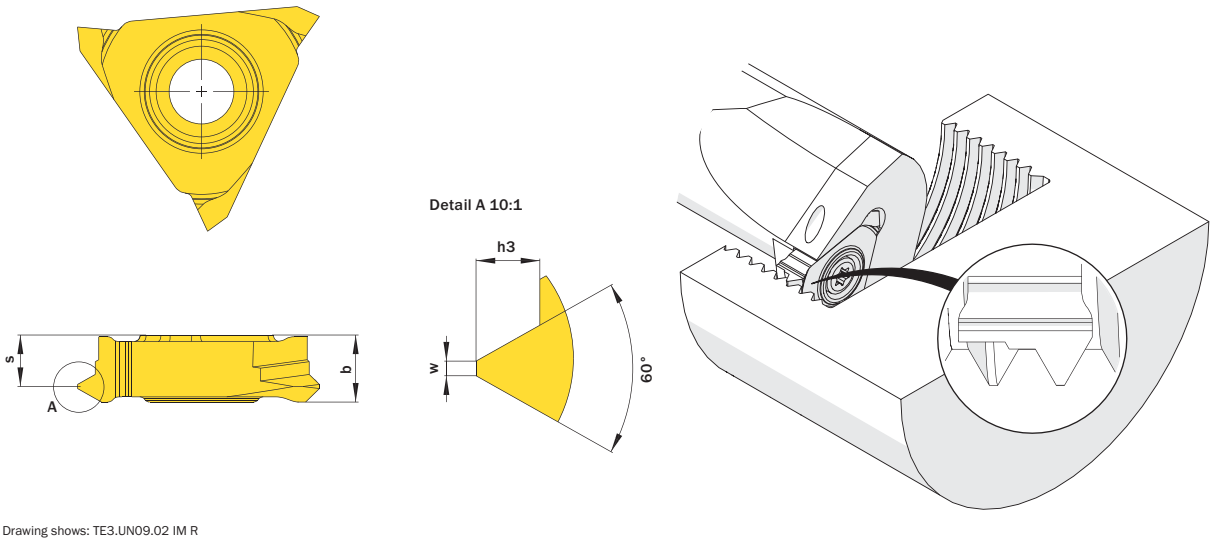

Drawing shows: TE3.UN09.02 IM R

Threads/Inch	Part number	Webcode www.simtek.com/webcode	Our first choice P K M N S	b inch	h3 inch	S inch	w inch	Connectcode www.simtek.com/ccode	
8	**TE3.UN08.02 IM R**	ATWW	X800 X400	0.228“	0.068“	0.169“	0.016“	TE3.R.5.3	inch
9	**TE3.UN09.02 IM R**	ATWY	X800 X400	0.228“	0.060“	0.177“	0.014“	TE3.R.5.3	inch
10	**TE3.UN10.02 IM R**	ATW0	X800 X400	0.228“	0.054“	0.181“	0.013“	TE3.R.5.3	inch
11	**TE3.UN11.02 IM R**	ATW2	X800 X400	0.228“	0.049“	0.181“	0.011“	TE3.R.5.3	inch
12	**TE3.UN12.02 IM R**	ATW4	X800 X400	0.228“	0.045“	0.185“	0.010“	TE3.R.5.3	inch

Order example: **TE3.UN12.02 IM R X600** (R = Right hand version, X600 = Grade)

simturn E3
SIMTEK Turning Tools Type E3

Threading, Whitworth, Full Profile

For a complete thread profile with correct depth, top radius and bottom radius. For internal and external application.

Cutting parameters (start)
Number of passes (external) **8 - 12**
Number of passes (internal) **10 - 16**
Recom. infeed method **Flank infeed**
Vc **Page 45**

Suitable toolholders on page
9, 10, 11, 12, 11, 11, 13, 14

SP HM L Legend 42

Scan QR-Code Or Visit **www.simtek.info/cp/316**

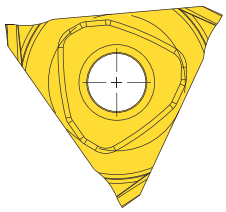

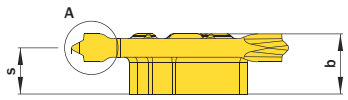

Detail A

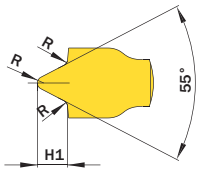

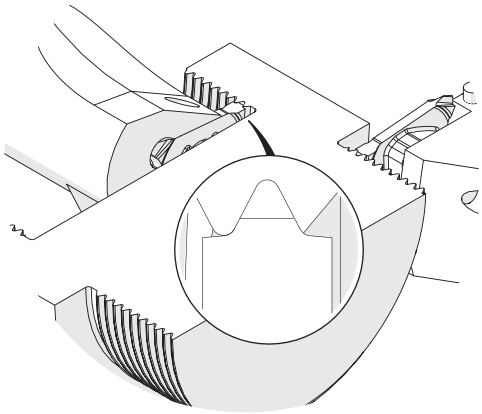

Drawing shows: TE3.BS14.02 ML

Threads/Inch	Part number	Webcode www.simtek.com/webcode		Our first choice P K M N S		b mm	H1 mm	R mm	S mm	Connectcode www.simtek.com/ccode	
11	**TE3.BS11.02 MR/L**	R ANTF	L ACAF	X800	X400	5,6	1,48	0,32	3,75	R TE3.R.5.3	L TE3.L.5.3
14	**TE3.BS14.02 MR/L**	R AJNX	L AHB8	X800	X400	5,6	1,16	0,25	4,25	R TE3.R.5.3	L TE3.L.5.3
16	**TE3.BS16.02 MR/L**	R ACBA	L AAEW	X800	X400	5,6	1,01	0,21	4,25	R TE3.R.5.3	L TE3.L.5.3
19	**TE3.BS19.02 MR/L**	R AJ52	L AGYG	X800	X400	5,6	0,86	0,18	4,25	R TE3.R.5.3	L TE3.L.5.3
20	**TE3.BS20.02 MR/L**	R ASCN	L ASCP	X800	X400	5,6	0,81	0,17	4,25	R TE3.R.5.3	L TE3.L.5.3
28	**TE3.BS28.02 MR/L**	R ABP6	L AEMP	X800	X400	5,6	0,58	0,12	4,9	R TE3.R.5.3	L TE3.L.5.3

Order example: **TE3.BS14.02 MR X800** (R = Right hand version, X800 = Grade)

simturn E3
SIMTEK Turning Tools Type E3

Threading, trapezoidal thread, full profile

Trapezoidal thread with chamfered crest. For internal and external application.

Cutting parameters (start)
Number of passes (external) **10 - 14**
Number of passes (internal) **12 - 18**
Recom. infeed method **Flank infeed**
Vc **Page 45**

Suitable toolholders on page
9, 10, 11, 12, 11, 11, 13, 14

SP HM R Legend 42

Scan QR-Code Or Visit **www.simtek.info/cp/317**

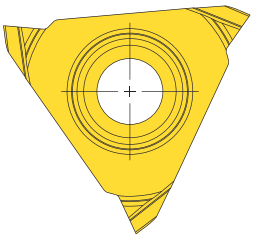

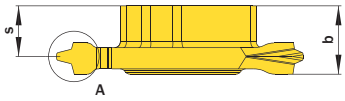

Detail A

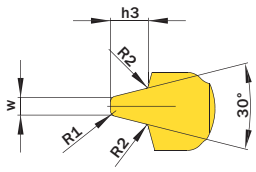

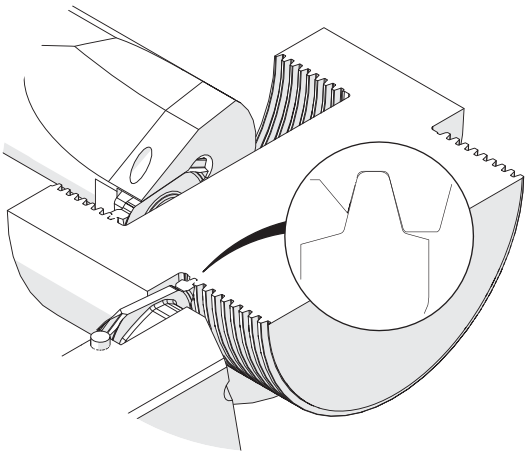

Drawing shows: TE3.TR20.02 MR

Pitch (as of)	Part number	Webcode www.simtek.com/webcode		Our first choice		b	h3	R1	R2	S	w	Connectcode www.simtek.com/ccode	
mm				P K M N S		mm	mm	mm	mm	mm	mm		
1,5	**TE3.TR15.02 M R/L**	R AHGV	L AKXY	X800	X400	5,6	0,9	0,1	0,075	4,5	0,47	R TE3.R.5.3	L TE3.L.5.3
2,0	**TE3.TR20.02 M R/L**	R AGE5	L AP3S	X800	X400	5,6	1,25	0,2	0,125	4,3	0,6	R TE3.R.5.3	L TE3.L.5.3
3,0	**TE3.TR30.02 M R/L**	R AJJA	L AEXM	X800	X400	5,6	1,75	0,2	0,125	4,0	0,96	R TE3.R.5.3	L TE3.L.5.3
4,0	**TE3.TR40.02 M R/L**	R AG5K	L ADDW	X800	X400	5,6	2,25	0,2	0,125	3,75	1,33	R TE3.R.5.3	L TE3.L.5.3
5,0	**TE3.TR50.02 M R/L**	R ABJQ	L ABCB	X800	X400	5,6	2,75	0,2	0,125	3,25	1,7	R TE3.R.5.3	L TE3.L.5.3
6,0	**TE3.TR60.02 M R/L**	R AE29	L AD4U	X800	X400	5,6	3,5	0,4	0,25	2,75	1,93	R TE3.R.5.3	L TE3.L.5.3

Order example: **TE3.TR60.02 M R X800** (R = Right hand version, X800 = Grade)

simturn E3
SIMTEK Turning Tools Type E3

Threading, ACME, Partial Profile

For ACME-thread profiles. For internal and external application.

Cutting parameters (start)
Number of passes (external) **10 - 14**
Number of passes (internal) **12 - 18**
Recom. infeed method **Flank infeed**
Vc **Page 45**

Suitable toolholders on page
9, 10, 11, 12, 11, 11, 13, 14

SP HM R Legend 42

Scan QR-Code Or Visit **www.simtek.info/cp/320**

This page contains inch tools! These tools are indicated by inch on the right hand side.

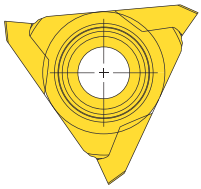

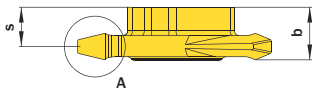

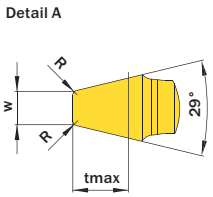

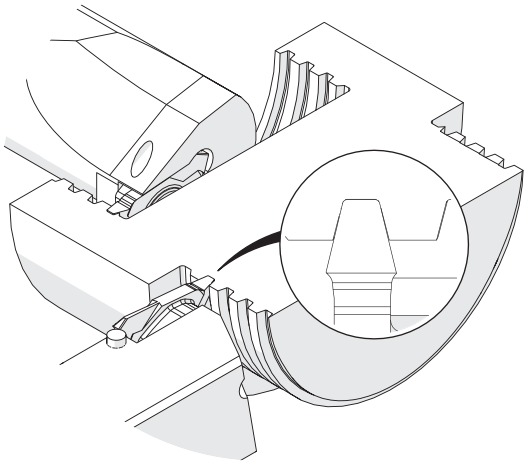

Drawing shows: TE3.AC06.01 MR

Threads/inch	Part number	Webcode www.simtek.com/webcode		Our first choice P K M N S		b mm/inch	R mm/inch	S mm/inch	tmax mm/inch	w mm/inch	Connectcode www.simtek.com/ccode				
4	**TE3.AC04.01 MR/L**	R ANK1	L AEUB	X800	X400	0.228“	0.012“	0.122“	0.139“	0.086“	R TE3.R.5.3	L TE3.L.5.3	inch
5	**TE3.AC05.01 MR/L**	R APD5	L ANBB	X800	X400	0.228“	0.008“	0.144“	0.111“	0.069“	R TE3.R.5.3	L TE3.L.5.3	inch
6	**TE3.AC06.01 MR/L**	R AC7C	L AHJK	X800	X400	0.228“	0.008“	0.167“	0.094“	0.057“	R TE3.R.5.3	L TE3.L.5.3	inch
8	**TE3.AC08.01 MR/L**	R AMJC	L AA6W	X800	X400	0.228“	0.006“	0.181“	0.072“	0.042“	R TE3.R.5.3	L TE3.L.5.3	inch
10	**TE3.AC10.01 MR/L**	R AFH3	L AMHD	X800	X400	0.228“	0.004“	0.189“	0.059“	0.035“	R TE3.R.5.3	L TE3.L.5.3	inch
12	**TE3.AC12.01 MR/L**	R AKBD	L ACM7	X800	X400	0.228“	0.004“	0.193“	0.049“	0.027“	R TE3.R.5.3	L TE3.L.5.3	inch
14	**TE3.AC14.01 MR/L**	R ANWB	L AHFT	X800	X400	0.228“	-	0.197“	0.043“	0.023“	R TE3.R.5.3	L TE3.L.5.3	inch
16	**TE3.AC16.01 MR/L**	R AACK	L AH4V	X800	X400	0.228“	-	0.201“	0.038“	0.020“	R TE3.R.5.3	L TE3.L.5.3	inch

Order example: **TE3.AC10.01 MR X800** (R = Right hand version, X800 = Grade)

simturn E3
SIMTEK Turning Tools Type E3

Threading, STUB ACME, Partial Profile

For STUB ACME-thread profiles. For internal and external application.

Cutting parameters (start)
Number of passes (external) **10 - 14**
Number of passes (internal) **12 - 18**
Recom. infeed method **Flank infeed**
Vc **Page 45**

Suitable toolholders on page
9, 10, 11, 12, 11, 11, 13, 14

SP HM R Legend 42

Scan QR-Code Or Visit **www.simtek.info/cp/983**

This page contains inch tools! These tools are indicated by inch on the right hand side.

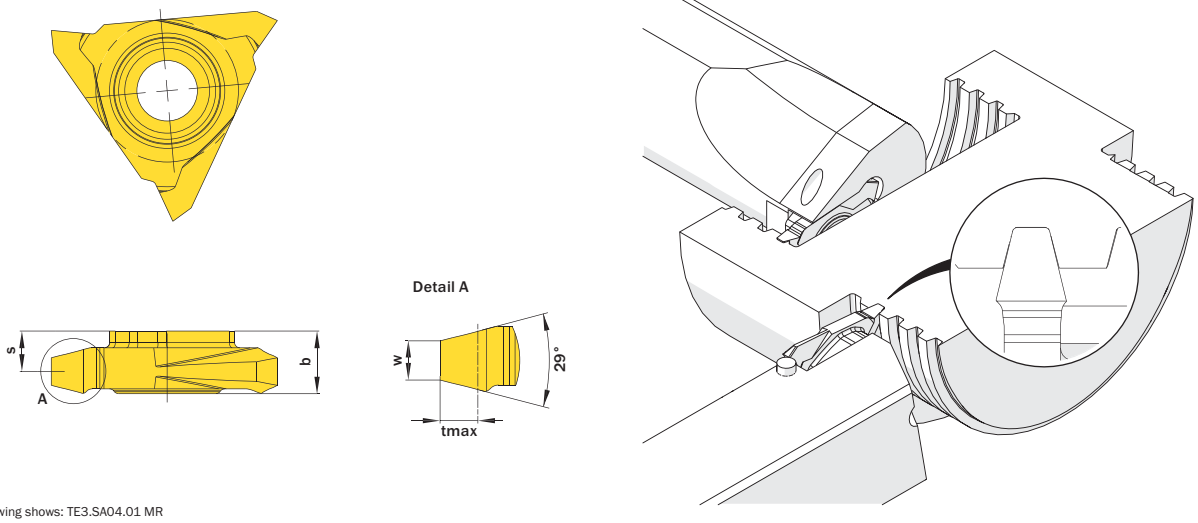

Drawing shows: TE3.SA04.01 MR

Threads/Inch	Part number	Webcode www.simtek.com/webcode				Our first choice P K M N S		b inch	S inch	tmax inch	w inch	Connectcode www.simtek.com/ccode				
4	**TE3.SA04.01 MR/L**	R	AVK4	L	AVK3	X800	X400	0.228“	0.148“	0.096“	0.100“	R	TE3.R.5.3	L	TE3.L.5.3	inch
5	**TE3.SA05.01 MR/L**	R	AVK5	L	AVK6	X800	X400	0.228“	0.161“	0.080“	0.079“	R	TE3.R.5.3	L	TE3.L.5.3	inch
6	**TE3.SA06.01 MR/L**	R	AVF7	L	AVF5	X800	X400	0.228“	0.173“	0.069“	0.065“	R	TE3.R.5.3	L	TE3.L.5.3	inch
8	**TE3.SA08.01 MR/L**	R	AVF9	L	AVF8	X800	X400	0.228“	0.185“	0.056“	0.048“	R	TE3.R.5.3	L	TE3.L.5.3	inch
10	**TE3.SA10.01 MR/L**	R	AVGB	L	AVGA	X800	X400	0.228“	0.193“	0.047“	0.037“	R	TE3.R.5.3	L	TE3.L.5.3	inch
12	**TE3.SA12.01 MR/L**	R	AVGD	L	AVGC	X800	X400	0.228“	0.197“	0.036“	0.032“	R	TE3.R.5.3	L	TE3.L.5.3	inch
14	**TE3.SA14.01 MR/L**	R	AVK8	L	AVK7	X800	X400	0.228“	0.201“	0.032“	0.028“	R	TE3.R.5.3	L	TE3.L.5.3	inch
16	**TE3.SA16.01 MR/L**	R	AVMA	L	AVK9	X800	X400	0.228“	0.205“	0.029“	0.024“	R	TE3.R.5.3	L	TE3.L.5.3	inch

Order example: **TE3.SA10.01 MR X800** (R = Right hand version, X800 = Grade)

Threading, NPT, Full Profile

For a complete thread profile with correct depth. For internal and external application.

Cutting parameters (start)
Number of passes (external) **8 - 12**
Number of passes (internal) **10 - 16**
Recom. infeed method **Flank infeed**
Vc **Page 45**

Suitable toolholders on page
9, 10, 11, 12, 11, 11, 13, 14

SP HM R Legend 42

Scan QR-Code Or Visit **www.simtek.info/cp/345**

This page contains inch tools! These tools are indicated by **inch** on the right hand side.

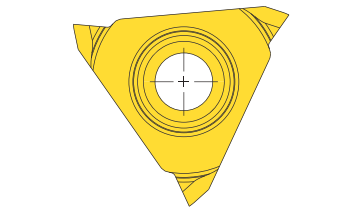

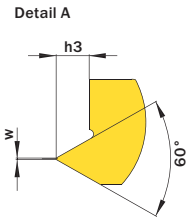

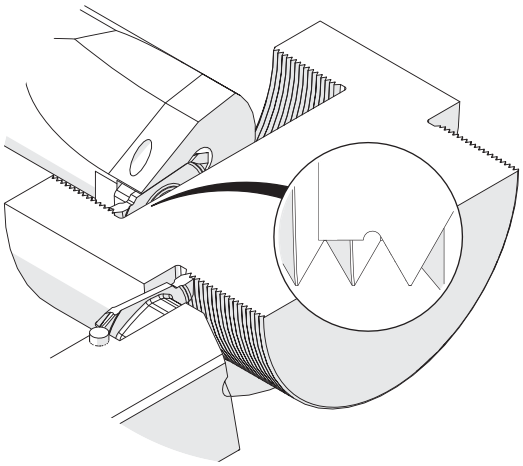

Drawing shows: TE3.NP18.02 M R

Threads/Inch	Part number	Webcode www.simtek.com/webcode	Our first choice P K M N S	b inch	h3 inch	S inch	w inch	Connectcode www.simtek.com/ccode	
14	**TE3.NP14.02 MR**	AQA4	X800 X400	0.228“	0.057“	0.185“	0.003“	TE3.R.5.3	inch
18	**TE3.NP18.02 MR**	AQA6	X800 X400	0.228“	0.044“	0.193“	0.002“	TE3.R.5.3	inch
27	**TE3.NP27.02 MR**	AQA9	X800 X400	0.228“	0.030“	0.201“	0.002“	TE3.R.5.3	inch

Order example: **TE3.NP18.02 MR X400** (R = Right hand version, X400 = Grade)

Parting off

Available in different angles, widths and with/without ground chip form channel.

Cutting parameters (start)	
f (ext.) **0,08 mm/U**	Vc **Page 45**

Suitable toolholders on page
9, 10, 11, 12, 11, 11, 13, 14

SP HM R Legend **42**

Scan **QR-Code** Or Visit **www.simtek.info/cp/311**

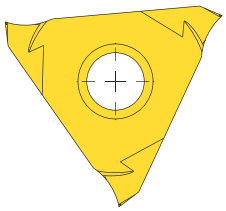

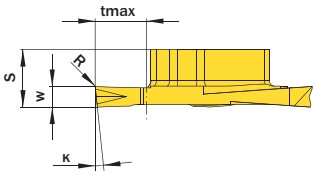

Similar illustrations

TE3.R...PS R

TE3.R...PT R

TE3.R...PV R

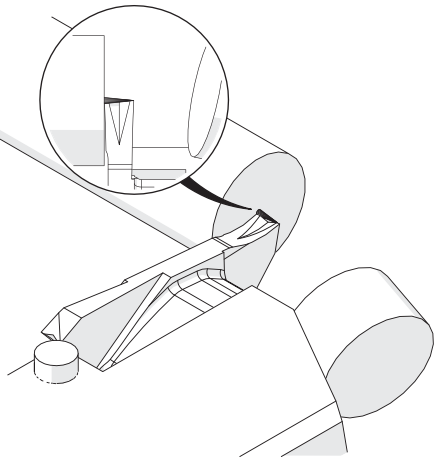

! Machineable materials. See below.

Drawing shows: TE3.R200.05 PT R

w -0,05 mm	K	With chip form channel	Part number	Webcode www.simtek.com/webcode	Our first choice P K M N S	R mm	S mm	tmax mm	Connectcode www.simtek.com/ccode
▼ w = 1,0 mm									
1,0	6°	No	**TE3.R100.06 PS R**	AH0U	X800 X400	0,1	5,45	5,0	TE3.R.5.3
1,0	6°	Yes	**TE3.R100.06 PT R**	AGJH	X800 X400	0,1	5,45	5,0	TE3.R.5.3
1,0	6°	Yes	**TE3.R100.06 PV R**	AU7D	X800 X400	0,1	5,45	5,0	TE3.R.5.3
1,0	12°	No	**TE3.R100.12 PS R**	AP4T	X800 X400	0,1	5,45	5,0	TE3.R.5.3
1,0	12°	Yes	**TE3.R100.12 PT R**	ACYU	X800 X400	0,1	5,45	5,0	TE3.R.5.3
1,0	12°	Yes	**TE3.R100.12 PV R**	AU7B	X800 X400	0,1	5,45	5,0	TE3.R.5.3
▼ w = 1,6 mm									
1,6	6°	No	**TE3.R160.06 PS R**	AJ3Y	X800 X400	0,1	5,6	5,0	TE3.R.5.3
1,6	6°	Yes	**TE3.R160.06 PT R**	AMWZ	X800 X400	0,1	5,6	5,0	TE3.R.5.3
1,6	6°	Yes	**TE3.R160.06 PV R**	AU7A	X800 X400	0,1	5,6	5,0	TE3.R.5.3
▼ w = 2,0 mm									
2,0	5°	No	**TE3.R200.05 PS R**	ANAS	X800 X400	0,1	5,6	5,0	TE3.R.5.3
2,0	5°	Yes	**TE3.R200.05 PT R**	AGZ7	X800 X400	0,1	5,6	5,0	TE3.R.5.3
2,0	5°	Yes	**TE3.R200.05 PV R**	AU69	X800 X400	0,1	5,6	5,0	TE3.R.5.3
2,0	12°	No	**TE3.R200.12 PS R**	A3DD	X800 X400	0,1	5,45	5,0	TE3.R.5.3

Order example: **TE3.R200.05 PT R X800** (R = Right hand version, X800 = Grade)

T3.R...PS R: For a wide var,ety of workpiece materials.

T3.R...PT R/TE3.R...PV R:
For a wide variety of workpiece materials as well as especially for long-chipping materials. Please contact our technical support in case of doubt:
+1 862 757 8130 usa@simtek.com

Parting Off

Available in different angles, widths and with/without ground chip form channel.

Cutting parameters (start)	
f (ext.) **0,08 mm/U**	Vc **Page 45**

Suitable toolholders on page
9, 10, 11, 12, 13, 14

SP HM | L | Legend 42

Scan QR-Code | Or Visit **www.simtek.info/cp/324**

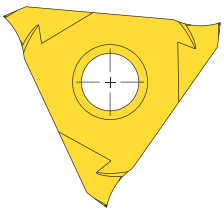

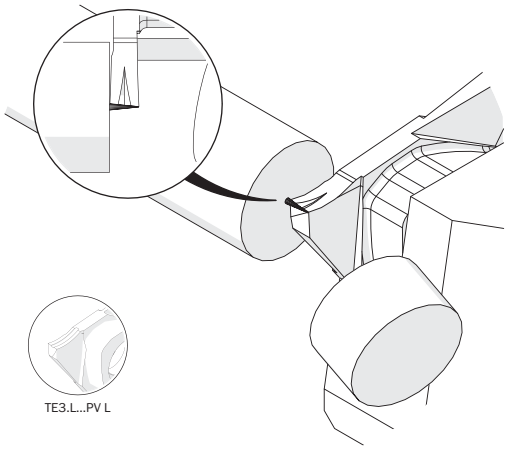

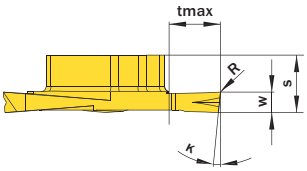

Similar illustrations

TE3.L...PS L

TE3.L...PT L

TE3.L...PV L

! Machineable materials. See below.

Drawing shows: TE3.L200.05 PT L

w -0,05 mm	κ	With chip form channel	Part number	Webcode www.simtek.com/webcode	Our first choice P K M N S	R mm	S mm	tmax mm	Connectcode www.simtek.com/ccode
▼ w = 1,0 mm									
1,0	6°	No	**TE3.L100.06 PS L**	ABKC	X800 X400	0,1	5,45	5,0	TE3.L.5.3
1,0	6°	Yes	**TE3.L100.06 PT L**	ATXW	X800 X400	0,1	5,45	5,0	TE3.L.5.3
1,0	6°	Yes	**TE3.L100.06 PV L**	AU7M	X800 X400	0,1	5,45	5,0	TE3.L.5.3
1,0	12°	No	**TE3.L100.12 PS L**	AP4S	X800 X400	0,1	5,45	5,0	TE3.L.5.3
1,0	12°	Yes	**TE3.L100.12 PT L**	ATXV	X800 X400	0,1	5,45	5,0	TE3.L.5.3
▼ w = 1,6 mm									
1,6	6°	No	**TE3.L160.06 PS L**	APPB	X800 X400	0,1	5,6	5,0	TE3.L.5.3
1,6	6°	Yes	**TE3.L160.06 PT L**	AMW5	X800 X400	0,1	5,6	5,0	TE3.L.5.3
1,6	6°	Yes	**TE3.L160.06 PV L**	AU7K	X800 X400	0,1	5,6	5,0	TE3.L.5.3
1,6	12	Yes	**TE3.L160.12 PT L**	A2P0	X800 X400	0,1	5,6	5,0	TE3.L.5.3
▼ w = 2,0 mm									
2,0	5°	No	**TE3.L200.05 PS L**	AH4K	X800 X400	0,1	5,6	5,0	TE3.L.5.3
2,0	5°	Yes	**TE3.L200.05 PT L**	AHAU	X800 X400	0,1	5,6	5,0	TE3.L.5.3
2,0	5°	Yes	**TE3.L200.05 PV L**	AU7F	X800 X400	0,1	5,6	5,0	TE3.L.5.3
2,0	12	Yes	**TE3.L200.12 PT L**	A2P1	X800 X400	0,1	5,6	5,0	TE3.L.5.3

Order example: **TE3.L160.06 PT L X800** (L = Left hand version, X800 = Grade)

T3.L...PS R: For a wide var,ety of workpiece materials.
T3.L...PT R/TE3.L...PV R:
For a wide variety of workpiece materials as well as especially for long-chipping materials. Please contact our technical support in case of doubt:
+1 862 757 8130 or usa@simtek.com

Parting Off

Available in different angles, widths and with/without ground chip form channel.

Cutting parameters (start)	
f (ext.) **0,08 mm/U**	Vc **Page 45**

Suitable toolholders on page
9, 10, 11, 12, 13, 14

SP HM L Legend **42**

Scan **QR-Code** Or Visit **www.simtek.info/cp/326**

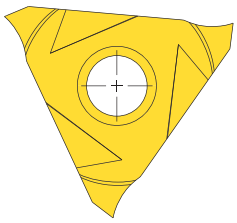

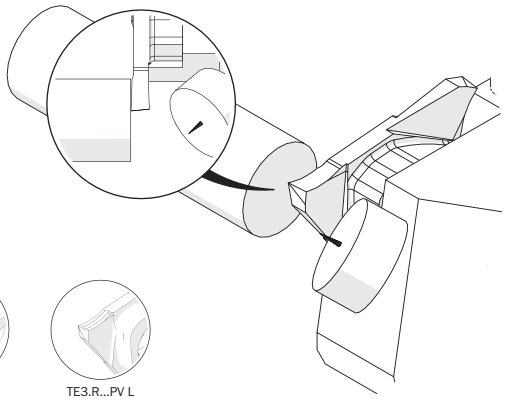

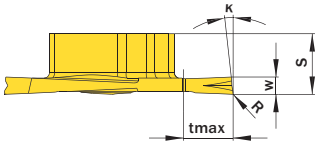

Similar illustrations

TE3.R...PS L

TE3.R...PT L

TE3.R...PV L

! Machineable materials. See below.

Drawing shows: TE3.R160.06 PT L

w -0,05 mm	K	With chip form channel	Part number	Webcode www.simtek.com/webcode	Our first choice P K M N S	R mm	S mm	tmax mm	Connectcode www.simtek.com/ccode
▼ w = 1,0 mm									
1,0	6°	No	**TE3.R100.06 PS L**	AE0Y	X800 X400	0,1	5,45	5,0	TE3.L.5.3
▼ w = 1,6 mm									
1,6	6°	No	**TE3.R160.06 PS L**	AHQA	X800 X400	0,1	5,6	5,0	TE3.L.5.3
1,6	6°	Yes	**TE3.R160.06 PT L**	AJNP	X800 X400	0,1	5,6	5,0	TE3.L.5.3
1,6	6°	Yes	**TE3.R160.06 PV L**	AU7C	X800 X400	0,1	5,6	5,0	TE3.L.5.3
▼ w = 2,0 mm									
2,0	5°	No	**TE3.R200.05 PS L**	AA8H	X800 X400	0,1	5,6	5,0	TE3.L.5.3
2,0	5°	Yes	**TE3.R200.05 PT L**	AHYQ	X800 X400	0,1	5,6	5,0	TE3.L.5.3
2,0	5°	Yes	**TE3.R200.05 PV L**	AU7E	X800 X400	0,1	5,6	5,0	TE3.L.5.3

Order example: **TE3.R160.06 PS L X800** (L = Left hand version, X800 = Grade)

T3.R...PS L: For a wide var,ety of workpiece materials.
T3.R...PT L/TE3.R...PV L:
For a wide variety of workpiece materials as well as especially for long-chipping materials. Please contact our technical support in case of doubt:
+1 862 757 8130 or usa@simtek.com

Face Grooving

For face grooves in different widths. Available with different clearance angles.

Cutting parameters (start)

f (ext.)	Vc
0,04 mm/U	**Page 45**

Suitable toolholders on page
9, 10, 11, 12, 13, 14

SP HM R Legend **42**

Scan **QR-Code** Or Visit **www.simtek.info/cp/327**

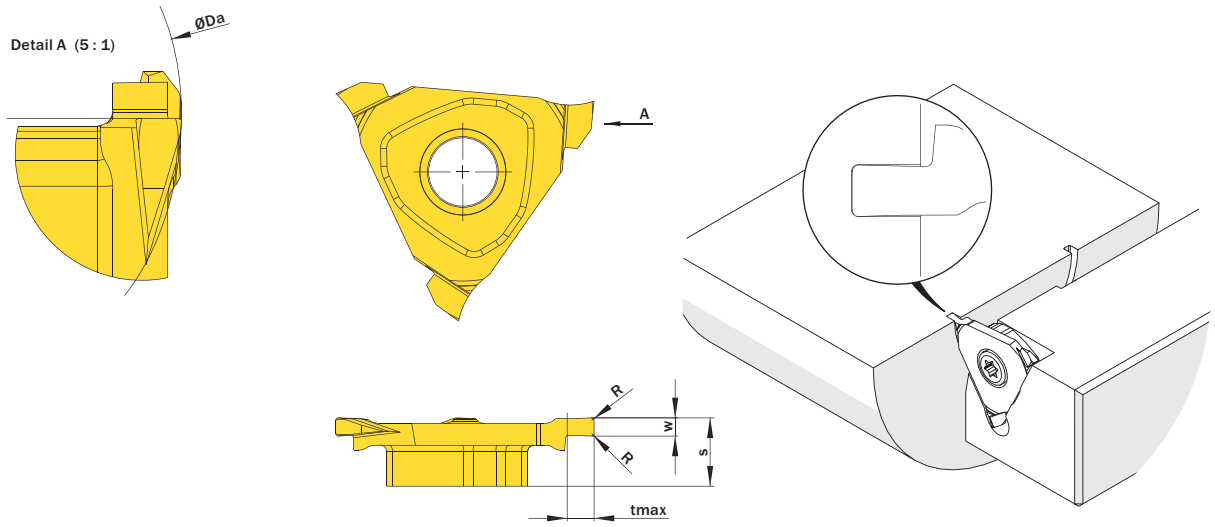

Drawing shows: TE3.R150.020 AG R

w ±0,02 mm	R mm	Part number	Webcode www.simtek.com/webcode	Our first choice P K M N S	ØDa mm	S mm	tmax mm	Connectcode www.simtek.com/ccode
1,5	0,2	**TE3.R150.020 AG R**	AF5U	X800 X400	30,0	5,6	2,0	TE3.R.5.3
2,0	0,2	**TE3.R200.020 AG R**	AFVU	X800 X400	30,0	5,6	3,0	TE3.R.5.3
3,0	0,2	**TE3.R300.020 AG R**	ANNM	X800 X400	30,0	5,6	3,0	TE3.R.5.3

Order example: **TE3.R300.020 AG R X800** (R = Right hand version, X800 = Grade)

Face Grooving

For face grooves in different widths. Please pay attention to the clearance angles.

Cutting parameters (start)	
f (ext.) **0,04 mm/U**	Vc **Page 45**

Suitable toolholders on page
9, 10, 11, 12, 13, 14

SP HM L Legend **42**

Scan **QR-Code** Or Visit **www.simtek.info/cp/328**

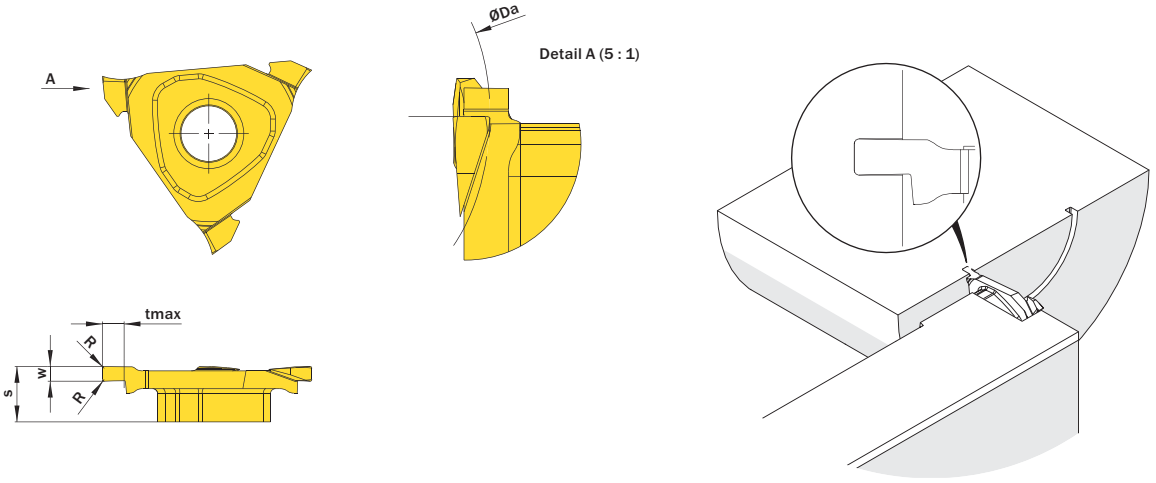

Drawing shows: TE3.R150.020 AG L

w ±0,02 mm	R mm	Part number	Webcode www.simtek.com/webcode	Our first choice P K M N S	ØDa mm	S mm	tmax mm	Connectcode www.simtek.com/ccode
1,5	0,2	**TE3.R150.020 AG L**	AE96	X800 X400	20,0	5,6	2,0	TE3.L.5.3
2,0	0,2	**TE3.R200.020 AG L**	ADYQ	X800 X400	30,0	5,6	3,0	TE3.L.5.3
3,0	0,2	**TE3.R300.020 AG L**	APTH	X800 X400	30,0	5,6	3,0	TE3.L.5.3

Order example: **TE3.R200.020 AG L X800** (L = Left hand version, X800 = Grade)

Face Grooving

For face grooves in different widths. Please pay attention to the clearance angles.

Cutting parameters (start)	
f (ext.) **0,04 mm/U**	Vc **Page 45**

Suitable toolholders on page
9, 10, 11, 12, 13, 14

SP HM L Legend **42**

Scan **QR-Code** Or Visit **www.simtek.info/cp/330**

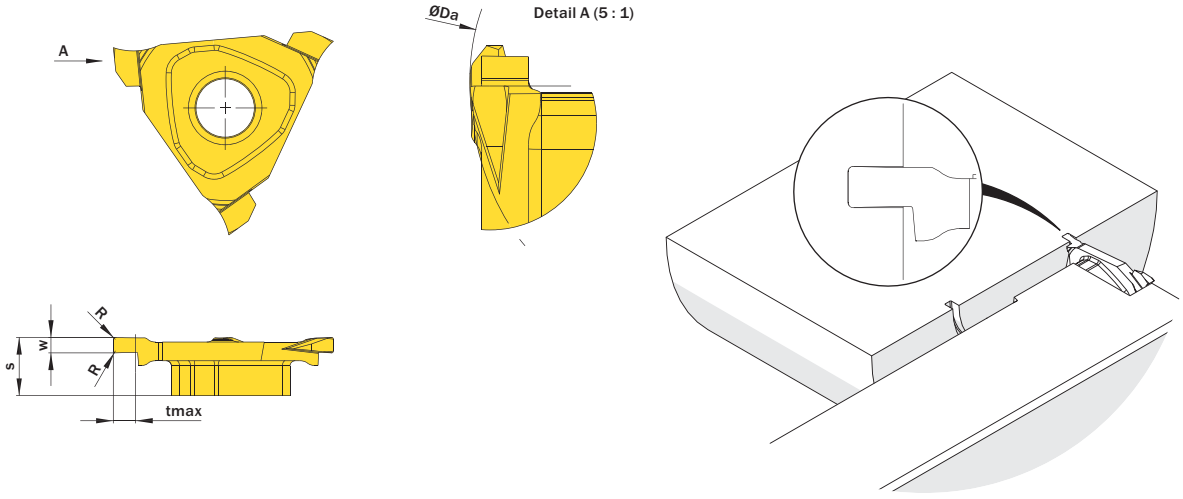

Drawing shows: TE3.L150.020 AG L

w ±0,02 mm	R mm	Part number	Webcode www.simtek.com/webcode	Our first choice P K M N S	ØDa mm	S mm	tmax mm	Connectcode www.simtek.com/ccode
1,5	0,2	**TE3.L150.020 AG L**	AAU1	X800 X400	20,0	5,6	2,0	TE3.L.5.3
2,0	0,2	**TE3.L200.020 AG L**	AB5A	X800 X400	30,0	5,6	3,0	TE3.L.5.3
3,0	0,2	**TE3.L300.020 AG L**	ACF5	X800 X400	30,0	5,6	3,0	TE3.L.5.3

Order example: **TE3.L150.020 AG L X800** (L = Left hand version, X800 = Grade)

Face Grooving

For face grooves in different widths. Please pay attention to the clearance angles.

Cutting parameters (start)	
f (ext.) **0,04 mm/U**	Vc **Page 45**

Suitable toolholders on page
9, 10, 11, 12, 13, 14

SP HM R Legend **42**

Scan **QR-Code** Or Visit **www.simtek.info/cp/329**

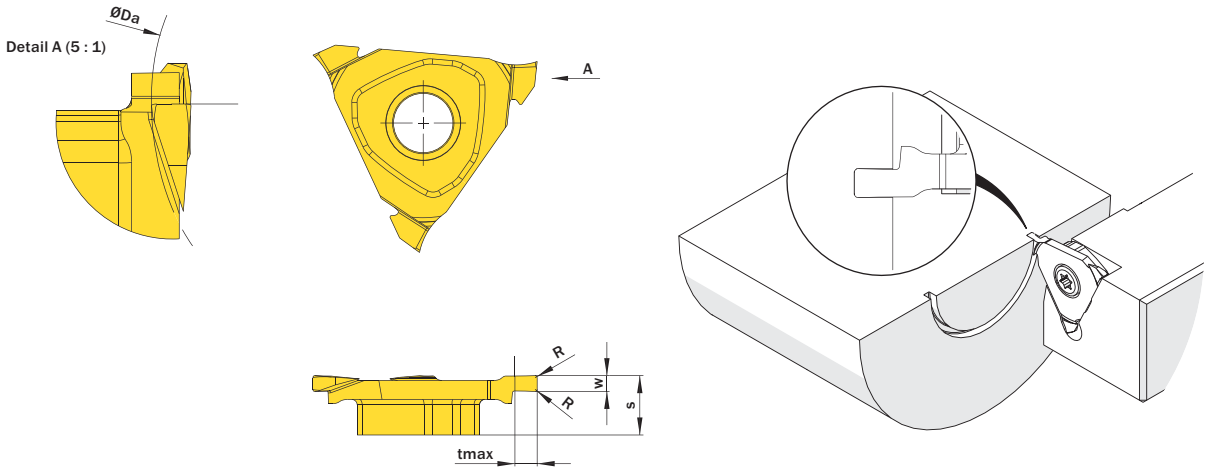

Drawing shows: TE3.L150.020 AG R

w ±0,02 mm	R mm	Part number	Webcode www.simtek.com/webcode	Our first choice P K M N S	ØDa mm	S mm	tmax mm	Connectcode www.simtek.com/ccode
1,5	0,2	**TE3.L150.020 AG R**	ABWV	X800 X400	20,0	5,6	2,0	TE3.R.5.3
2,0	0,2	**TE3.L200.020 AG R**	AACH	X800 X400	30,0	5,6	3,0	TE3.R.5.3
3,0	0,2	**TE3.L300.020 AG R**	AK3P	X800 X400	30,0	5,6	3,0	TE3.R.5.3

Order example: **TE3.L200.020 AG R X800** (R = Right hand version, X800 = Grade)

Poly-V-Belt Grooves

For Poly-V-profiles J, K and L.

Cutting parameters (start)	
f (ext.) **0,04 mm/U**	Vc **Page 45**

Suitable toolholders on page
9, 10, 11, 12, 13, 14

SP HM R Legend **42**

Scan **QR-Code** Or Visit **www.simtek.info/cp/344**

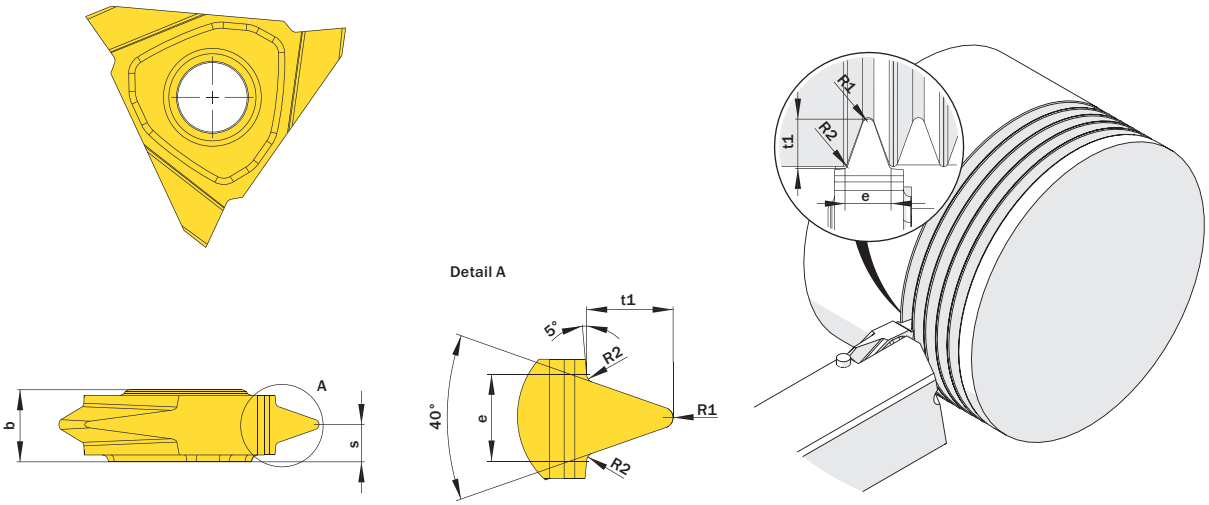

Drawing shows: TE3.0356.00 JR

e ±0,025 mm	Part number	Webcode www.simtek.com/webcode	Our first choice P K M N S	Profile	b mm	R1 mm	R2 mm	S mm	t1 mm	Connectcode www.simtek.com/ccode
2,34	**TE3.0223.00 JR/L**	R AHDF L AK8P	X800 X400	J	5,8	0,25	0,2	4,25	2,3	R TE3.R.5.3 L TE3.L.5.3
3,56	**TE3.0356.00 JR/L**	R AB95 L AP4U	X800 X400	K	5,8	0,35	0,25	3,45	3,69	R TE3.R.5.3 L TE3.L.5.3
4,7	**TE3.0470.00 JR/L**	R AP4W L AP4V	X800 X400	L	5,45	0,33	0,4	2,725	5,02	R TE3.R.5.3 L TE3.L.5.3

▌Order example: **TE3.0356.00 JR X800** (R = Right hand version, X800 = Grade)

Additional information

T01

The simturn threading inserts with partial profile for metric ISO-threads are multi-purpose tools. This means that each insert is offering the possibility to machine different pitches.

The insert is always designed to meet the pitch given as „Pitch (as of)“: Machining this pitch will result in a standard conform thread form.

The given „Pitch (up to)“ can be machined too with this insert at the expense of standard conformity: The resulting thread will be slightly deeper than the standard. The deeper thread is usually acceptable, but the application and use needs to be evaluated.

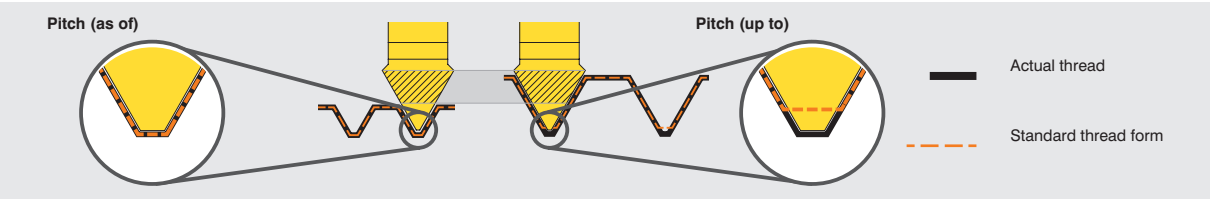

Example

Tools for highest expectations
SIMTEK

Legend

SP CBN **CBN insert**

SP HM **Carbide insert**

TW ST **Steel toolholder**

L **Left hand version shown**

R **Right hand version shown, left hand version inversely**

Through coolant

LM **For light-alloys**

Only suitable for external applications

Only suitable for internal applications

Tools for highest expectations
SIMTEK

simturn E3 Product list

Part Nr.	P
TE3.0.500.00 L	9
TE3.0.500.00 R	9
TE3.0.625.00 L	9
TE3.0.625.00 R	9
TE3.0.750.00 L	9
TE3.0.750.00 R	9
TE3.0025.A.00 L	11
TE3.0025.A.00 R	11
TE3.0025.C.00 L	12
TE3.0025.C.00 R	12
TE3.0032.A.00 L	11
TE3.0032.A.00 R	11
TE3.0032.C.00 L	12
TE3.0032.C.00 R	12
TE3.0040.A.00 L	11
TE3.0040.A.00 R	11
TE3.0040.C.00 L	12
TE3.0040.C.00 R	12
TE3.0050.00 G L	15
TE3.0050.00 G R	15
TE3.0060.00 G L	15
TE3.0060.00 G R	15
TE3.0070.00 G L	15
TE3.0070.00 G R	15
TE3.0080.00 G L	15
TE3.0080.00 G R	15
TE3.0090.00 G L	15
TE3.0090.00 G R	15
TE3.0100.00 G L	15
TE3.0100.00 G R	15
TE3.0100.005 N L	18
TE3.0100.005 N R	18
TE3.0100.02 N L	18
TE3.0100.02 N R	18
TE3.0100.05 V L	21
TE3.0100.05 V R	21
TE3.0110.00 G L	15
TE3.0110.00 G R	15
TE3.0110.00 GT L	16
TE3.0110.00 GT R	16
TE3.0110.31 G L	15
TE3.0110.31 G R	15
TE3.0117.00 GR	15
TE3.0120.06 V L	21
TE3.0120.06 V R	21
TE3.0130.00 G L	15
TE3.0130.00 G R	15
TE3.0130.00 GT L	16
TE3.0130.00 GT R	16
TE3.0150.02 N L	18
TE3.0150.02 N R	18
TE3.0150.02 NC R	20
TE3.0150.07 V L	21
TE3.0150.07 V R	21
TE3.0157.079 VR	21
TE3.0160.00 G L	15
TE3.0160.00 G R	15
TE3.0160.00 GT L	16
TE3.0160.00 GT R	16
TE3.0160.08 V L	21
TE3.0160.08 V R	21
TE3.0180.09 V L	21
TE3.0180.09 V R	21
TE3.0185.00 G L	15
TE3.0185.00 G R	15
TE3.0185.00 GT L	16

Part Nr.	P
TE3.0185.00 GT R	16
TE3.0200.02 N L	18
TE3.0200.02 N R	18
TE3.0200.02 NC R	20
TE3.0200.04 N L	18
TE3.0200.04 N R	18
TE3.0200.10 V L	21
TE3.0200.10 V R	21
TE3.0215.00 G L	15
TE3.0215.00 G R	15
TE3.0215.00 GT L	16
TE3.0215.00 GT R	16
TE3.0220.11 V L	21
TE3.0220.11 V R	21
TE3.0223.00 JL	40
TE3.0223.00 JR	40
TE3.0250.02 N L	18
TE3.0250.02 N R	18
TE3.0250.02 NW L	19
TE3.0250.02 NW R	19
TE3.0250.04 N L	18
TE3.0250.04 N R	18
TE3.0250.12 V L	21
TE3.0250.12 V R	21
TE3.0265.00 G L	15
TE3.0265.00 G R	15
TE3.0280.14 V L	21
TE3.0280.14 V R	21
TE3.0300.02 N L	18
TE3.0300.02 N R	18
TE3.0300.04 N L	18
TE3.0300.04 N R	18
TE3.0300.06 N L	18
TE3.0300.06 N R	18
TE3.0300.08 N L	18
TE3.0300.08 N R	18
TE3.0300.15 V L	21
TE3.0300.15 V R	21
TE3.0315.00 G L	15
TE3.0315.00 G R	15
TE3.0356.00 JL	40
TE3.0356.00 JR	40
TE3.0360.18 V L	21
TE3.0360.18 V R	21
TE3.0400.02 N L	18
TE3.0400.02 N R	18
TE3.0400.04 N L	18
TE3.0400.04 N R	18
TE3.0400.20 V L	21
TE3.0400.20 V R	21
TE3.0415.00 G L	15
TE3.0415.00 G R	15
TE3.0470.00 JL	40
TE3.0470.00 JR	40
TE3.0515.00 G L	15
TE3.0515.00 G R	15
TE3.1.000.00 L	9
TE3.1.000.00 R	9
TE3.1.000.C.00 L	12
TE3.1.000.C.00 R	12
TE3.1105.00 F L	17
TE3.1105.00 F R	17
TE3.1212.00 L	9
TE3.1212.00 R	9
TE3.1216.00 L	9
TE3.1216.00 R	9

Part Nr.	P
TE3.1216.13 L	9
TE3.1216.13 R	9
TE3.1306.00 F L	17
TE3.1306.00 F R	17
TE3.1607.00 F L	17
TE3.1607.00 F R	17
TE3.1608.00 F L	17
TE3.1608.00 F R	17
TE3.1609.00 F L	17
TE3.1609.00 F R	17
TE3.1616.00 L	9
TE3.1616.00 R	9
TE3.1616.13 L	9
TE3.1616.13 R	9
TE3.1616.90 L	10
TE3.1616.90 R	10
TE3.1810.00 F L	17
TE3.1810.00 F R	17
TE3.1812.00 F L	17
TE3.1812.00 F R	17
TE3.2020.00 L	9
TE3.2020.00 R	9
TE3.2020.13 L	9
TE3.2020.13 R	9
TE3.2020.90 L	10
TE3.2020.90 R	10
TE3.2115.00 F L	17
TE3.2115.00 F R	17
TE3.2525.00 L	9
TE3.2525.00 R	9
TE3.2525.15 L	9
TE3.2525.15 R	9
TE3.2525.90 L	10
TE3.2525.90 R	10
TE3.2616.00 F L	17
TE3.2616.00 F R	17
TE3.2617.00 F L	17
TE3.2617.00 F R	17
TE3.3118.00 F L	17
TE3.3118.00 F R	17
TE3.3225.17 L	9
TE3.3225.17 R	9
TE3.4120.00 F L	17
TE3.4120.00 F R	17
TE3.4125.00 F L	17
TE3.4125.00 F R	17
TE3.5130.00 F L	17
TE3.5130.00 F R	17
TE3.AC04.01 ML	30
TE3.AC04.01 MR	30
TE3.AC05.01 ML	30
TE3.AC05.01 MR	30
TE3.AC06.01 ML	30
TE3.AC06.01 MR	30
TE3.AC08.01 ML	30
TE3.AC08.01 MR	30
TE3.AC10.01 ML	30
TE3.AC10.01 MR	30
TE3.AC12.01 ML	30
TE3.AC12.01 MR	30
TE3.AC14.01 ML	30
TE3.AC14.01 MR	30
TE3.AC16.01 ML	30
TE3.AC16.01 MR	30
TE3.BS11.02 ML	28
TE3.BS11.02 MR	28

Part Nr.	P
TE3.BS14.02 ML	28
TE3.BS14.02 MR	28
TE3.BS16.02 ML	28
TE3.BS16.02 MR	28
TE3.BS19.02 ML	28
TE3.BS19.02 MR	28
TE3.BS20.02 ML	28
TE3.BS20.02 MR	28
TE3.BS28.02 ML	28
TE3.BS28.02 MR	28
TE3.L100.06 PS L	34
TE3.L100.06 PT L	34
TE3.L100.06 PV L	34
TE3.L100.12 PS L	34
TE3.L100.12 PT L	34
TE3.L150.020 AG L	38
TE3.L150.020 AG R	39
TE3.L160.06 PS L	34
TE3.L160.06 PT L	34
TE3.L160.06 PV L	34
TE3.L160.12 PT L	34
TE3.L200.020 AG L	38
TE3.L200.020 AG R	39
TE3.L200.05 PS L	34
TE3.L200.05 PT L	34
TE3.L200.05 PV L	34
TE3.L200.12 PT L	34
TE3.L300.020 AG L	38
TE3.L300.020 AG R	39
TE3.MT05.01 EM L	23
TE3.MT05.01 EM R	23
TE3.MT05.02 EM L	22
TE3.MT05.02 EM R	22
TE3.MT07.02 EM L	22
TE3.MT07.02 EM R	22
TE3.MT08.02 EM L	22
TE3.MT08.02 EM R	22
TE3.MT10.01 EM L	23
TE3.MT10.01 EM R	23
TE3.MT10.01 IM R	25
TE3.MT10.02 EM L	22
TE3.MT10.02 EM R	22
TE3.MT10.02 IM R	24
TE3.MT12.01 EM L	23
TE3.MT12.01 EM R	23
TE3.MT12.02 EM L	22
TE3.MT12.02 EM R	22
TE3.MT15.01 EM L	23
TE3.MT15.01 EM R	23
TE3.MT15.01 IM R	25
TE3.MT15.02 EM L	22
TE3.MT15.02 EM R	22
TE3.MT15.02 IM R	24
TE3.MT17.01 EM L	23
TE3.MT17.01 EM R	23
TE3.MT17.02 EM L	22
TE3.MT17.02 EM R	22
TE3.MT20.01 EM L	23
TE3.MT20.01 EM R	23
TE3.MT20.01 IM R	25
TE3.MT20.02 EM L	22
TE3.MT20.02 EM R	22
TE3.MT20.02 IM R	24
TE3.MT25.01 EM L	23
TE3.MT25.01 EM R	23
TE3.MT25.01 IM R	25

Part Nr.	P
TE3.MT25.02 EM L	22
TE3.MT25.02 EM R	22
TE3.MT25.02 IM R	24
TE3.MT30.01 EM L	23
TE3.MT30.01 EM R	23
TE3.MT30.01 IM R	25
TE3.MT30.02 EM L	22
TE3.MT30.02 EM R	22
TE3.MT30.02 IM R	24
TE3.MT35.01 EM L	23
TE3.MT35.01 EM R	23
TE3.MT35.01 IM R	25
TE3.MT35.02 EM L	22
TE3.MT35.02 EM R	22
TE3.MT35.02 IM R	24
TE3.MT40.02 EM L	22
TE3.MT40.02 EM R	22
TE3.MT50.02 EM L	22
TE3.MT50.02 EM R	22
TE3.MT60.01 EM L	23
TE3.MT60.01 EM R	23
TE3.MT60.02 EM L	22
TE3.MT60.02 EM R	22
TE3.NP14.02 MR	32
TE3.NP18.02 MR	32
TE3.NP27.02 MR	32
TE3.R100.06 PS L	35
TE3.R100.06 PS R	33
TE3.R100.06 PT R	33
TE3.R100.06 PV R	33
TE3.R100.12 PS R	33
TE3.R100.12 PT R	33
TE3.R100.12 PV R	33
TE3.R150.020 AG L	37
TE3.R150.020 AG R	36
TE3.R160.06 PS L	35
TE3.R160.06 PS R	33
TE3.R160.06 PT L	35
TE3.R160.06 PT R	33
TE3.R160.06 PV L	35
TE3.R160.06 PV R	33
TE3.R200.020 AG L	37
TE3.R200.020 AG R	36
TE3.R200.05 PS L	35
TE3.R200.05 PS R	33
TE3.R200.05 PT L	35
TE3.R200.05 PT R	33
TE3.R200.05 PV L	35
TE3.R200.05 PV R	33
TE3.R200.12 PS R	33
TE3.R300.020 AG L	37
TE3.R300.020 AG R	36
TE3.SA04.01 ML	31
TE3.SA04.01 MR	31
TE3.SA05.01 ML	31
TE3.SA05.01 MR	31
TE3.SA06.01 ML	31
TE3.SA06.01 MR	31
TE3.SA08.01 ML	31
TE3.SA08.01 MR	31
TE3.SA10.01 ML	31
TE3.SA10.01 MR	31
TE3.SA12.01 ML	31
TE3.SA12.01 MR	31
TE3.SA14.01 ML	31
TE3.SA14.01 MR	31

Tools for highest expectations
SIMTEK

simturn E3 Product list

Part Nr.	P
TE3.SA16.01 MR	31
TE3.TR15.02 M L	29
TE3.TR15.02 M R	29
TE3.TR20.02 M L	29
TE3.TR20.02 M R	29
TE3.TR30.02 M L	29
TE3.TR30.02 M R	29
TE3.TR40.02 M L	29
TE3.TR40.02 M R	29
TE3.TR50.02 M L	29
TE3.TR50.02 M R	29
TE3.TR60.02 M L	29
TE3.TR60.02 M R	29
TE3.UN08.02 EM R	26
TE3.UN08.02 IM R	27
TE3.UN09.02 EM R	26
TE3.UN09.02 IM R	27
TE3.UN10.02 EM R	26
TE3.UN10.02 IM R	27
TE3.UN11.02 EM R	26
TE3.UN11.02 IM R	27
TE3.UN12.02 EM R	26
TE3.UN12.02 IM R	27
TE3.UN14.02 EM R	26
TE3.UN16.02 EM R	26
TE3.UN18.02 EM R	26
TE3.UN20.02 EM R	26
TE3.UN24.02 EM R	26
TE3.UN28.02 EM R	26
TE3.UN32.02 EM R	26
TOA.TE3.51.C.19.05 L	13
TOA.TE3.51.C.19.05 R	13
TOA.TE3.51.C.29.05 L	13
TOA.TE3.51.C.29.05 R	13
TOA.TE3.V1.00 L	11
TOA.TE3.V1.00 R	11
TOA.TE3.V2.00 L	11
TOA.TE3.V2.00 R	11
TOG.K.TE3.A1 L	14
TOG.K.TE3.A1 R	14
TOG.K.TE3.B1 L	14
TOG.K.TE3.B1 R	14

Information About The Cutting Parameters

Cutting speed recommendation as of page 46

General information about the cutting parameters recommendations

The given cutting parameters for speed and feed rates are ment as initial start values and are estimated for standard application conditions.
The best parameters depend on a wide variety of machine, workpiece and tool related conditions, for example the general machine condition, and can be above or below the given start values.

Example factors of influence and their effect on the cutting parameters

Reduce values	Increase values
Difficult machine and clamping conditions	Solid machine and clamping conditions
Difficult to machine materials	Easy to machine materials
Long tool reach (L2)	Small tool reach (L2)
No chip form geometry	With chip form geometry

List not complete

Suitability of cutting grades in relation to work piece hardness

Grade	Recommended up to approx.
X8*	HRC52
*T90 / *T91	HRC62
CBN	HRC65 (Depending on application)

Tools for highest expectations
SIMTEK

Cutting Speed Recommendation

ISO-Group	Recommended Cutting Grade	Work piece material	Sub-group	Alternative cutting grade	Vc m/min (Start)
P	X800 X802 X804 X808	Steel, unalloyed	≤ 0,15 % C	X400 / X600	210
			0,15 - 0,4 % C	X400 / X600	190
			≥ 0,4 % C	X400 / X600	180
		Steel, low alloyed (alloying elements ≤ 5%)	Non-hardened	X400 / X600	170
			Hardened	X400 / X600	100
		Steel, high alloyed (Alloying elements > 5%)	Annealed	X400 / X600	110
			Hardened	X400 / X600	90
		Castings	Unalloyed	X400 / X600	150
			Low alloyed (Alloying elements ≤ 5%)	X400 / X600	120
			High alloyed (Alloying elements > 5%)	X400 / X600	90
M	X400 / X600 X402 / X602 X404 / X604 X408 / X608	Stainless Steel Ferritic/Martensitic	Non-hardened	*T41	150
			PH-hardened	*T41	110
			Hardened	*T41	110
		Stainless Steel Austenitic	Austenitic	*T41	140
			PH-hardened	*T41	100
			Super Austenitic	*T41	110
		Stainless Steel Austenitic-ferritic (Duplex)	Non-weldable ≥ 0,05 % C	*T41	120
			Weldable < 0,05 % C	*T41	100
		Stainless Steel (Cast) Ferritic/martensitic	Non-hardened	*T41	130
			PH-hardened	*T41	90
			Hardened	*T41	100
		Stainless Steel (Cast) Austenitic	Austenitic	*T41	130
			PH-gehärtet	*T41	90
		Stainless Steel (Cast) Austenitic-ferritic (Duplex)	Non-weldable ≥ 0,05 % C	*T41	110
			Weldable < 0,05 % C	*T41	90

Tools for highest expectations
SIMTEK

Cutting Speed Recommendation

ISO-Group	Recommended Cutting Grade	Work piece material	Sub-group	Alternative cutting grade	Vc m/min (Start)
K	X800 X802 X804 X808	Malleable	Ferritic (short chipping)	*T57	180
			Pearlitic (long chipping)	*T57	150
		Grey Cast Iron	Low tensile strength	*T57	200
			High tensile strength	*T57	150
		Spheroidal Graphite cast iron	Ferritic	*T57	120
			Pearlitic	*T57	110
			Martensitic	*T57	110
N	X400 / X600 X402 / X602 X404 / X604 X408 / X608	Aluminium alloys, Whrought	Can not be hardened	*F25	590
			Can be hardened, hardened	*F25	530
		Aluminium alloys, Cast	Can not be hardened	*F25	590
			Can be hardened, hardened	*F25	530
		Aluminium alloys, Cast	< 5 % Si	*F25	240
			5 - 12 % Si	*X17	240
			> 12 % Si	PKD[1]	180
		Copper- and Copper Alloys	Free Cutting Alloys, ≥1 % Pb	*F25	290
			Brass, leaded bronzes, ≤ 1 % Pb	*F25	290
			Bronze, lead-free copper incl. electrolytic copper	*F25	210

Tools for highest expectations
SIMTEK

Cutting Speed Recommendation

ISO-Group	Recommended Cutting Grade	Work piece material	Sub-group	Alternative cutting grade	Vc m/min (Start)
S	X400 / X600 X402 / X602 X404 / X604 X408 / X608	Heat-resistant super alloys Fe-based	Annealed or solution treated	*X79	40
			Aged or solution treated and aged	*X79	30
		Heat-resistant super alloys Ni-based	Annealed or solution treated	*X79	40
			Aged or solution treated and aged	*X79	20
			Cast or Cast and aged	*X79	30
		Heat-resistant super alloys Co-based	Annealed or solution treated	*X79	10
			Solution treated and aged	*X79	10
			Cast or Cast and aged	*X79	10
		Titanium Alloys	Commercial pure (99,5 % Ti)	*X79	80
			α, near α and α + β alloys, annealed	*X79	40
			α+β Alloys in aged conditions as well as β alloys. Annealed or aged.	*X79	40
H	CBN[1]	Hardened steel		*T91	50
		Chilled cast iron, cast or cast and aged		*T91	90

1) For best results, a special cutting edge geometry is recommended here.
Please contact our tecnical support +1 862 757 8130 oder usa@simtek.com.

(2) Recommendation depends on the chosen cutting inserts. Please look at the cutting grade recommendations on the catalog page of the cutting insert.

Tools for highest expectations
SIMTEK

General Instructions For Use

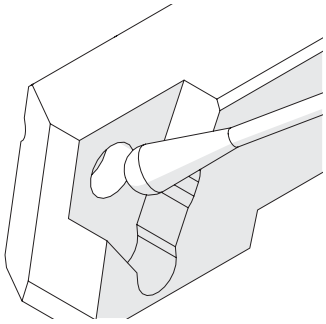

Please clean insert seat well before mounting and use.

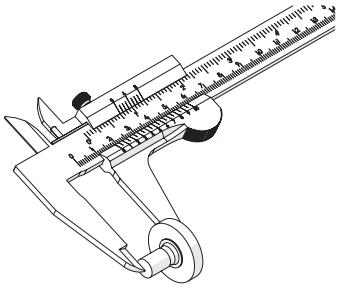

Please control your work pieces frequently.

We recommend the use of tool presetting and measuring devices.

Tools for highest expectations
SIMTEK